No. 38 Procedure for calculation and verification of the Energy Efficiency Design Index (EEDI)

(May 2013)
(Rev.1 Mar 2016)
(Rev.2 Mar 2019)
(Rev.3 Jan 2021)
(Rev.4 Feb 2023)
(Rev.5 Oct 2024)

Introduction

This procedure applies to all cases of Class Societies' involvement in conducting the survey and certification of EEDI in accordance with regulations 5, 6, 7, 8 and 9 of MARPOL Annex VI.

1 Definitions

"Industry Guidelines" means the "*2024 Industry Guidelines for calculation and verification of the Energy Efficiency Design Index (EEDI)*" that may be revised in order to remain in line with the relevant IMO Guidelines.

"Verifying Society" is a Society which conducts the survey and verification of EEDI of a ship.

"Witnessing Society" is a Society which has witnessed the towing tank test of a ship of the same type as the ship whose EEDI is verified by the Verifying Society. "Ship of the same type" is defined in IMO "*2022 Guidelines on Survey and Certification of the Energy Efficiency Design Index (EEDI)*" as amended.

"Witnessing protocol" is a document showing evidence of the witnessing and acceptance of the towing tank test by the Witnessing Society, with indication such as date, signature and possible remarks of the attending surveyor.

2 Scope of the Procedure

The scope of this procedure is defined in Part I of the Industry Guidelines.

3 Calculation of EEDI

The procedure to compute the EEDI is documented in Part II of the Industry Guidelines. For the purpose of this Procedural Requirement, calculation of the EEDI is to be performed in accordance with IMO "*2022 Guidelines on the method of calculation of the attained Energy Efficiency Design Index (EEDI) for new ships", as amended* and Part II of the Industry Guidelines, as amended.

Note:

1. This Procedural Requirement applies from 1 July 2013.
2. Rev.1 of this Procedural Requirement applies from 1 July 2016.
3. Rev.2 of this Procedural Requirement applies from 1 July 2019.
4. Rev.3 of this Procedural Requirement applies from 1 April 2021.
5. Rev.4 of this Procedural Requirement applies from 1 April 2023.
6. Rev.5 of this Procedural Requirement applies from 1 January 2025.

4 Verification of EEDI

The procedure to verify the EEDI is documented in Part III of the Industry Guidelines, together with Appendixes 1, 3, 4 and 5. For the purpose of this Procedural Requirement, verification of the EEDI is to be performed in accordance with IMO "*2022 Guidelines on Survey and Certification of the Energy Efficiency Design Index (EEDI)*" as amended and Part III of the Industry Guidelines, as amended.

A sample of document to be submitted to the Verifier including additional information for verification is provided in Appendix 2 of the Industry Guidelines.

5 Acceptance of towing tank tests witnessed by another Society

Further to the agreement of the submitter of the EEDI Technical File and the Shipowner, a Verifying Society may accept towing tank tests reports witnessed by another Society if the towing tank tested ship is of the same type as the ship of which the EEDI is verified.

Copies of the following documents are to be provided to the Verifying Society, with due consideration given to the protection of the Intellectual Property Rights (IPR) as indicated under paragraph 14 of the Industry Guidelines:

- Calculation of the reference speed of the verified ship explicitly making reference to the speed power curves of the tank tested ship model

- Witnessing protocol of the tank tested ship endorsed by the surveyor of the Witnessing Society

- Towing tank test report of the tank tested ship

On specific request of the Verifying Society, the following additional information is to be submitted:

- Ship lines and model particulars, loading and operating conditions of the tank tested ship as described in 4.2.7.2 of IMO "*2022 Guidelines on Survey and Certification of the Energy Efficiency Design Index (EEDI)*" as amended, showing that the verified ship and the tank tested ship are of the same type

If some of the relevant information is held by the original Witnessing Society, the submitter should authorize the Witnessing Society to make the information available to the Verifying Society.

6 New ship (as per MARPOL Annex VI Regulation 2.2.18) designed before the entry into force of the MARPOL Annex VI amendments introducing the EEDI

It is expected that the towing tank tests of a new ship performed before the entry into force of MARPOL Annex VI amendments introducing the EEDI have not been witnessed by a Verifier. In this case, towing tank test results provided by a tank test organization with quality control certified according to a recognized scheme or with experience acceptable to the Verifying Society may be accepted by the Verifying Society.

Attached: 2024 Industry Guidelines for calculation and verification of the Energy Efficiency Design Index (EEDI)

End of Document

2024 INDUSTRY GUIDELINES FOR CALCULATION AND VERIFICATION OF THE ENERGY EFFICIENCY DESIGN INDEX (EEDI)

TABLE OF CONTENTS

Part I – Scope of the Industry Guidelines

1 Scope of the Guidelines

Part II – Explanatory notes on calculation of EEDI

2 Introduction

3 EEDI formula

4 Fuel consumption and fuel conversion factor

5 Capacity, power and speed

6 Shaft generator and shaft motor

7 Weather factor f_w

8 Correction factor for ship specific design elements f_j

9 Capacity factor f_i

10 Cubic capacity correction factor fc and cargo gears factor f_l

11 Innovative energy efficient technologies

12 Example of calculation

Part III – Verification of EEDI

13 Verification process

14 Documents to be submitted

15 Preliminary verification at the design stage

16 Final verification at sea trial

17 Verification of the EEDI in case of major conversion

1 Appendix 1. Review and witness points

2 Appendix 2. Sample of document to be submitted to the verifier

3 Appendix 3. Verifying the calibration of model test equipment

4 Appendix 4. Review and witnessing of model test procedures

5 Appendix 5. Sample report "preliminary verification of EEDI"

6 Appendix 6. Sample calculations of EEDI

Part I - Scope of the Industry Guidelines

1 Scope of the Guidelines

1.1 Objective

The objective of these Industry Guidelines for calculation and verification of the Energy Efficiency Design Index (EEDI), hereafter designated as “the Industry Guidelines”, is to provide details and examples of calculation of attained EEDI and to support the method and role of the verifier in charge of conducting the survey and certification of EEDI in compliance with latest IMO Resolutions with respect to following Guidelines:

- 2022 Guidelines on the method of calculation of the attained Energy Efficiency Design Index (EEDI) for new ships adopted by Resolution MEPC.364(79) as amended referred to as the "IMO Calculation Guidelines" in the present document.

- 2022 Guidelines on the Survey and Certification of the Energy Efficiency Design Index (EEDI) adopted by Resolution MEPC.365(79) as amended referred to as the "IMO Verification Guidelines" in the present document.

- Guidelines for determining minimum propulsion power to maintain the manoeuvrability of ships in adverse conditions MEPC.1/Circ.850/Rev.3 as amended.

- 2021 Guidance on treatment of innovative energy efficiency technologies for calculation and verification of the attained EEDI and EEXI, MEPC.1/Circ.896 .

- 2012 interim Guidelines for the calculation of the coefficient f_w for decrease in ship speed in a representative sea condition for trial use, MEPC.1/Circ.796.

In the event that the IMO Guidelines are amended, then pending amendment of these Industry Guidelines, calculation and verification of EEDI are to be implemented in compliance with the amended IMO Guidelines.

1.2 Application

These Guidelines apply to new ships as defined in regulation 2.2.18 of MARPOL Annex VI of 400 gross tonnage and above of the ship types to which Regulation 22 of MARPOL Annex VI is applicable and defined under regulations of MARPOL Annex VI.

Cement carriers must be classified as Bulk Carriers within the scope of MARPOL Annex VI, unless otherwise agreed by the flag state, either in response to a specific owner’s request or as per previously issued general instructions.

If, upon flag instruction, the cement carrier is categorized differently from a bulk carrier, the following criteria must be verified:

• The Statement of Compliance for the carriage of solid bulk cargoes shall list only “cement”.
• The Cargo Ship Safety Certificate * can’t indicate “bulk carrier” in the “type of ship”. The ship type specified on the certificate should correspond to the flag's instructions.

** or alternatively Cargo Ship Safety Construction Certificate and Cargo Ship Safety Equipment Certificate.*

The calculation and verification of EEDI shall be performed for each:

1. new ship before ship delivery
2. new ship in service which has undergone a major conversion
3. new or existing ship which has undergone a major conversion that is so extensive that the ship is regarded by the Administration as a newly constructed ship

The Industry Guidelines shall not apply to ships which have non-conventional propulsion, such as diesel-electric propulsion, turbine propulsion or hybrid propulsion systems, with the exception of cruise passenger ships with diesel-electric propulsion and LNG carriers having diesel-electric or steam turbine propulsion systems.

The Industry Guidelines shall not apply to category A ships as defined in the Polar Code.

Part II - Explanatory notes on calculation of EEDI

2 Introduction

The attained Energy Efficiency Design Index (EEDI) is a measure of a ship's energy efficiency determined as follows:

$$EEDI = \frac{CO_2 emission}{Transport\ work}$$

The CO2 emission is computed from the fuel consumption taking into account the carbon content of the fuel. The fuel consumption is based on the power used for propulsion and auxiliary power measured at defined design conditions.

The transport work is estimated by multiplying the ship capacity as defined in the IMO Calculation Guidelines by the ship's reference speed at the corresponding draft. The reference speed is determined at 75% of the rated installed power in general and 83% of the rated installed propulsion power for LNG carriers having diesel electric or steam turbine propulsion systems.

3 EEDI formula

The EEDI is provided by the following formula:

$$\frac{\left(\prod_{j=1}^{n} f_j\right)\left(\sum_{i=1}^{nME} P_{ME(i)} \cdot C_{FME(i)} \cdot SFC_{ME(i)}\right) + \left(P_{AE} \cdot C_{FAE} \cdot SFC_{AE}*\right) + \left(\left(\prod_{j=1}^{n} f_j \cdot \sum_{i=1}^{nPTI} P_{PTI(i)} - \sum_{i=1}^{neff} f_{eff(i)} \cdot P_{AEeff(i)}\right) C_{FAE} \cdot SFC_{AE}\right) - \left(\sum_{i=1}^{neff} f_{eff(i)} \cdot P_{eff(i)} \cdot C_{FME} \cdot SFC_{ME}**\right)}{f_i \cdot f_c \cdot f_l \cdot Capacity \cdot f_w \cdot V_{ref} \cdot f_m}$$

With the following notes:

The global fi factor may also be written:

$$f_i = \left(\prod_{i=1}^{m} f_i\right)$$

where each individual fi factor is explained under section 9 of this document.

If part of the normal maximum sea load is provided by shaft generators, the term $P_{AE} \cdot C_{FAE} \cdot SFC_{AE}$ may be replaced by:

$$\left(P_{AE} - 0.75 * \sum_{i=1}^{nPTO} P_{PTO(i)}\right) \cdot C_{FAE} \cdot SFC_{AE} + 0.75 * \sum_{i=1}^{nPTO} P_{PTO(i)} \cdot C_{FME(i)} \cdot SFC_{ME(i)}$$

with the condition $0.75 * \sum_{i=1}^{nPTO} P_{PTO(i)} \leq P_{AE}$.

Where the total propulsion power is limited by verified technical means as indicated under section 6, the term $\left(\sum_{i=1}^{nME} P_{ME(i)} \cdot C_{FME(i)} \cdot SFC_{ME(i)} + \sum_{i=1}^{nPTI} P_{PTI(i)} \cdot C_{FAE} \cdot SFC_{AE}\right)$ is to be replaced by 75 percent of the limited total propulsion power multiplied by the average weighted value of ($SFC_{ME}.C_{FME}$) and ($SFC_{AE}.C_{FAE}$).

Due to the uncertainties in the estimation of the different parameters, the values of attained and required EEDI have to be reported with no more than three significant figures (for instance,

2.23 or 10.3) rounded * and compliance with Regulations 22, 24 of Chapter 4 of MARPOL Annex VI is to be verified in accordance with this accuracy.

* *The decision to round up or down is based on the digit immediately following the targeted place value. If this digit is 5 or greater, rounding involves increasing the value of the targeted digit and truncating subsequent digits. Conversely, if the digit is less than 5, rounding entails maintaining the targeted digit and truncating subsequent digits. For example, 9.343 is rounded to 9.34; 10.58 to 10.6 and 3.245 to 3.25)*

4 Fuel consumption and Fuel Conversion Factor

4.1 General

The conversion factor CF and the specific fuel consumption, SFC, are determined from the results recorded in the parent engine NOx Technical File as defined in the NOx Technical Code 2008.

The fuel used when determining corrected SFC corresponds to the value of the CF conversion factor, according to the table provided under paragraph “CF ; Conversion factor between fuel consumption and CO2 emission” of the IMO Calculation Guidelines.

SFC is the corrected specific fuel consumption, measured in g/kWh, of the engines or steam turbines as defined under paragraph “SFC, Certified specific fuel consumption” of the IMO Calculation guidelines.

- In case SFC is corrected to ISO standard reference conditions with standard LCV of LFO (41,200 kJ/kg), SFC and the conversion factor, Cf (3.151), are to correspond to LFO;
- In case SFC is corrected to ISO standard reference conditions with standard LCV of MDO (42,700kJ/kg), SFC and the conversion factor, Cf (3.206), are to correspond to MDO.

For main engines certified to the E2 or E3 test cycles of the NOx Technical Code 2008, the engine Specific Fuel Consumption (SFCME(i)) is that recorded in the test report included in a NOx Technical File for the parent engine(s) at 75% of MCR power.

For engines certified to the D2 or C1 test cycles of the NOx Technical Code 2008, the engine Specific Fuel Consumption ($SFC_{AE(i)}$) is that recorded in the test report included in a NOx Technical File for the parent engine(s) at 50% of MCR power or torque rating.

At the design stage, in case of unavailability of test reports in the NOx Technical File, the SFC value given by the manufacturer with the addition of the guarantee tolerance is to be used.

4.2 Dual-fuel engines

Gas fuel may be used as primary fuel for one or more of the main and auxiliary engine(s) in accordance with the IMO Verification Guidelines.

For these dual-fuel engines, the C_F factor and the Specific Fuel Consumption for gas (LNG) and for pilot fuel should be combined at the relevant EEDI load point as described in the IMO Calculation Guidelines.

4.3 LNG carriers with steam turbine propulsion

The Specific Fuel Consumption of the steam turbine should be determined during the running tests of the main boilers and steam turbines on board under load during the sea trials. For preliminary estimate of EEDI, manufacturer’s certificate is to be used.

5 Capacity, power and speed

5.1 Capacity

The capacity of the ship is computed as a function of the gross tonnage for passenger and cruise passenger ships and of the deadweight for other types of ships as indicated the IMO Calculation Guidelines.

For the computation of the deadweight according to the IMO Calculation Guidelines, the lightweight of the ship and the displacement at the summer load draught are to be based on the results of the inclining test or lightweight check provided in the final stability booklet. At the design stage, the deadweight may be taken in the provisional documentation.

5.2 Power

The installed power for EEDI determination is taking into account the propulsion power and in general a fixed part of the auxiliary power, measured at the output of the crankshaft of main or auxiliary engine.

For LNG carriers having diesel electric propulsion system, the power P_{ME} is 83% of the rated output of the electrical propulsion motor(s) divided by the electrical chain efficiency from the output of the auxiliary engines to the output of the propulsion motor(s).

The total propulsion power is conventionally taken as follows:

$$\sum_{i=1}^{nME} P_{ME(i)} + \sum_{i=1}^{nPTI} (P_{PTI(i)} \cdot \eta_{PTI(i)}) \cdot \eta_{\overline{Gen}}$$

In this formula:

- The value of PME(i) may be limited by verified technical means (see 6 below)
- The total propulsion power may be limited by verified technical means. In particular an electronic engine control system may limit the total propulsion power, whatever the number of engines in function (see 6 below)

If shaft motors are installed (PTI), then in principle 75% of the shaft motor propulsion power is accounted for in the EEDI calculation. Detailed explanation about this is given in section 6.

The auxiliary power can be nominally defined as a specified proportion of main engine power aiming to cover normal maximum sea load for propulsion and accommodation[1]. The nominal values are 2.5% of main engine power plus 250 kW for installed main engine power equal to or above 10 MW. 5% of main engine power will be accounted if less than 10 MW main engine power is installed. Alternatively, as explained below, the value for auxiliary power can be taken from the electric power table (EPT) of the ship.

[1] under “PAE ; Auxiliary engine power” of the IMO Calculation Guidelines.

For Passenger ships, Ro-Ro Passenger Ships and Cruise Passenger Ships, the P_{AE} value should be estimated by the consumed electric power (excluding propulsion) in conditions when the ship is engaged in a voyage at reference speed (V_{ref}), as given in the electric power table (EPT), divided by the average efficiency of the generator(s) weighted by power.

As an option for other vessel types, if the difference between P_{AE} value calculated by paragraphs "PAE ; Auxiliary engine power" of IMO Calculation Guidelines and P_{AE} based on EPT, leads to a variation of the computed EEDI value exceeding 1%, the value for auxiliary power could be taken from the EPT.

5.3 Speed V_{ref}

The speed V_{ref} is the ship speed, measured in knots, verified during sea trials and corrected to be given in the following ideal conditions:

- in deep water of 15°C
- assuming the weather is calm with no wind, no current and no waves
- in the loading condition corresponding to the Capacity
- at the total propulsion power defined in 5.2 taking into account shaft generators and shaft motors

6 Shaft generator and shaft motor

6.1 Introduction and background

As for paragraphs "$P_{PTO(i)}$; Shaft generator" and "$P_{PTI(i)}$; Shaft Motor" of IMO Calculation Guidelines, content of this section applies to ships other than LNG carriers having diesel-electric propulsion system.

Ships need electrical power for the operation of engine auxiliary systems, other systems, crew accommodation and for any cargo purposes. This electrical power can be generated by diesel-generator sets (gen-sets), shaft generators, waste heat recovery systems driving a generator and possibly by other innovative technologies, e.g. solar panels.

Diesel-generator sets and shaft generators are the most common systems. While diesel-generator sets use a diesel engine powering a generator, a shaft generator is driven by the main engine. It is considered that due to the better efficiency of the main engine and efficiency of the shaft generator less CO_2 is emitted compared to gen-set operation.

The EEDI formula expresses the propulsion power of a vessel as 75% of the main engine power P_{ME}. It is also termed shaft power P_S, which corresponds to the ship's speed V_{ref} in the EEDI formula.

P_{AE} - the auxiliary power - is also included in the EEDI formula. However, this power demand is largely dependent on loading and trading patterns and it must also incorporate safety aspects, for example, the provision of a spare generator set. As noted in section 5, the auxiliary power can generally be taken into account as a fixed proportion of the main engine power (i.e. nominally 2.5% plus 250kW) [2].

[2] c.f.: precise instruction in IMO Calculation Guidelines.

The use of shaft generators is a well proven and often applied technology, particularly for high electrical power demands related to the payload e.g. reefer containers. Usually a ship design implements a main engine to reach the envisaged speed with some provision of sea margin. For the use of a shaft generator past practice and understanding was to install a bigger main engine to reach the same speed compared to the design without a shaft generator and to then have the excess power available from the main engine at any time for generation of electrical power. As a rule of thumb, one more cylinder was added to the main engine to cover this additional power demand.

The difficulty with this issue for calculation of the EEDI is that the excess power could be used to move the ship faster in the case where the shaft generator is not in use which would produce a distortion between ship designs which are otherwise the same.

The IMO Calculation Guidelines take these circumstances into account and offer options for the use of shaft generators. These options are described in detail, below.

Further, electric shaft motors operate similarly to shaft generators; sometimes a shaft generator can act as a shaft motor. The possible influence of shaft motors has also been taken into account in the IMO Calculation Guidelines and is also illustrated, below.

6.2 Main engine power without shaft generators

The main engines are solely used for the ship's propulsion. For the purpose of the EEDI, the main engine power is 75 % of the rated installed power MCR_{ME} for each main engine:

$$P_{ME(i)} = 0.75 \times MCR_{ME(i)}$$

6.3 Main engine power with shaft generators

Shaft generators produce electric power using power from the prime mover (main engine). Therefore the power used for the shaft generator is not available for the propulsion. Hence MCR_{ME} is the sum of the power needed for propulsion and the power needed for the shaft generator. Thus at least a part of the shaft generator's power should be deductible from the main engine power (P_{ME}).

The power driving the shaft generator is not only deducted in the calculation. As this power is not available for propulsion this yields a reduced reference speed. The speed is to be determined from the power curve obtained at the sea trial as explained in the schematic figure provided in paragraph "Option 2 of $P_{PTO(i)}$; Shaft generator" of the IMO Calculation Guidelines.

It has been defined that 75% of the main engine power is entered in the EEDI calculation. To induce no confusion in the calculation framework, it has therefore also been defined to take into account 75% of the shaft power take off.

For the calculation of the effect of shaft generators, two options are available.

6.3.1 Option 1

For this option, $P_{PTO(i)}$ is defined as 75% of the rated electrical output power MCR_{PTO} of each shaft generator. The maximum allowable deduction is limited by the auxiliary power P_{AE} as described in Paragraph "PAE ; Auxiliary engine power" of the IMO Calculation Guidelines. Then the main engine power P_{ME} is:

$$P_{PTO(i)} = 0.75 \times MCR_{PTO(i)}$$

$$\sum_{i=1}^{nME} P_{ME(i)} = 0.75 \times \sum MCR_{ME(i)} - \ 0.75 \times \sum P_{PTO(i)} \qquad with \sum P_{PTO(i)} \leq \frac{P_{AE}}{0.75}$$

This means, that only the maximum amount of shaft generator power that is equal to P_{AE} is deductible from the main engine power. In doing so, 75% of the shaft generator power to be used in the EEDI calculation must NOT be greater than the auxiliary power calculated in accordance to Para. "PAE ; Auxiliary engine power" of IMO Calculation Guidelines.

Higher shaft generators output than P_{AE} will not be accounted for under option 1.

6.3.2 Option 2

The main engine power P_{ME} to be considered for the calculation of the EEDI is defined as 75% of the power to which the propulsion system is limited. This can be achieved by any verified technical means, e.g. by electronic engine controls.

$$P_{ME(i)} = 0.75 \times P_{shaft,limit}$$

This option is to cover designs with the need for very high power requirements (e.g., pertaining to the cargo). With this option it is ensured that the higher main engine power cannot be used for a higher ship speed. This can be safeguarded by the use of verified technical devices limiting the power to the propulsor.

For example, consider a ship having a 15 MW main engine with a 3 MW shaft generator. The shaft limit is verified to 12 MW. The EEDI is then calculated with only 75% of 12 MW as main engine power as, in any case of operation, no more power than 12 MW can be delivered to the propulsor, irrespective of whether a shaft generator is in use or not.

It is to be noted that the guidelines do not stipulate any limits as to the value of the shaft limit in relation to main engine power or shaft generator power.

6.3.3 The use of specific fuel oil consumption and CF-factor

Shaft generators are driven by the main engine, therefore the specific fuel oil consumption of the main engine is allowed to be used to the full extent if 75% of the shaft generator power is equal to P_{AE}.

In the case shaft generator power is less than P_{AE} then 75% of the shaft generator power is calculated with the main engine's specific fuel oil consumption and the remaining part of the total P_{AE} power is calculated with SFC of the auxiliaries (SFC_{AE}).

The same applies to the conversion factor C_F, if different fuels are used in the EEDI calculation.

6.4 Total shaft power with shaft motors

In the case where shaft motor(s) are installed, the same guiding principles as explained for shaft generators, above, apply. But in contrast to shaft generators, motors do increase the total power to the propulsor and do increase ships' speed and therefore must be included in the total shaft power within the EEDI calculation. The total shaft power is thus main engine(s) power plus the additional shaft motor(s) power:

$$\sum P_{ME(i)} + \sum P_{PTI(i),Shaft}$$

Where:

$$\sum P_{PTI(i),Shaft} = \sum \left(0.75 \cdot P_{SM,\max(i)} \cdot \eta_{PTI(i)}\right)$$

and ΣP_{ME} may be 0(zero) if the ship is a diesel-electric cruise passenger ship.

Similar to the shaft generators, only 75% of the rated power consumption $P_{SM,max}$ (i.e. rated motor output divided by the motor efficiency) of each shaft motor divided by the weighted average efficiency of the generator(s) $\eta_{\overline{Ge}}$ is taken into account for EEDI calculation[3].

$$\sum P_{PTI(i)} = \frac{\Sigma\left(0.75 \cdot P_{SM,\max(i)}\right)}{\eta_{\overline{Gen}}}$$

Figure 1.1 provides the notations used for the power and efficiencies used in IMO Calculation Guidelines and the present document.

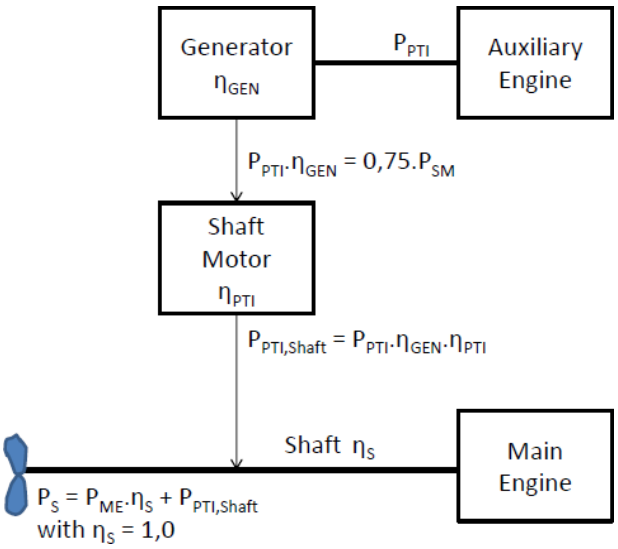

Figure 1.1: flow of power in a generic shaft motor installation

A power limitation similar to that described above for shaft generators can also be used for shaft motors. So if a verified technical measure is in place to limit the propulsion output, only 75% of limited power is to be used for EEDI calculation and also for that limited power V_{ref} is determined.

3 The efficiency of shaft generators in the previous section has consciously not been taken into account in the denominator as inefficient generator(s) would increase the deductible power.

A diagram is inserted to highlight where the mechanical and electrical efficiencies or the related devices (PTI and Generator's) are located:

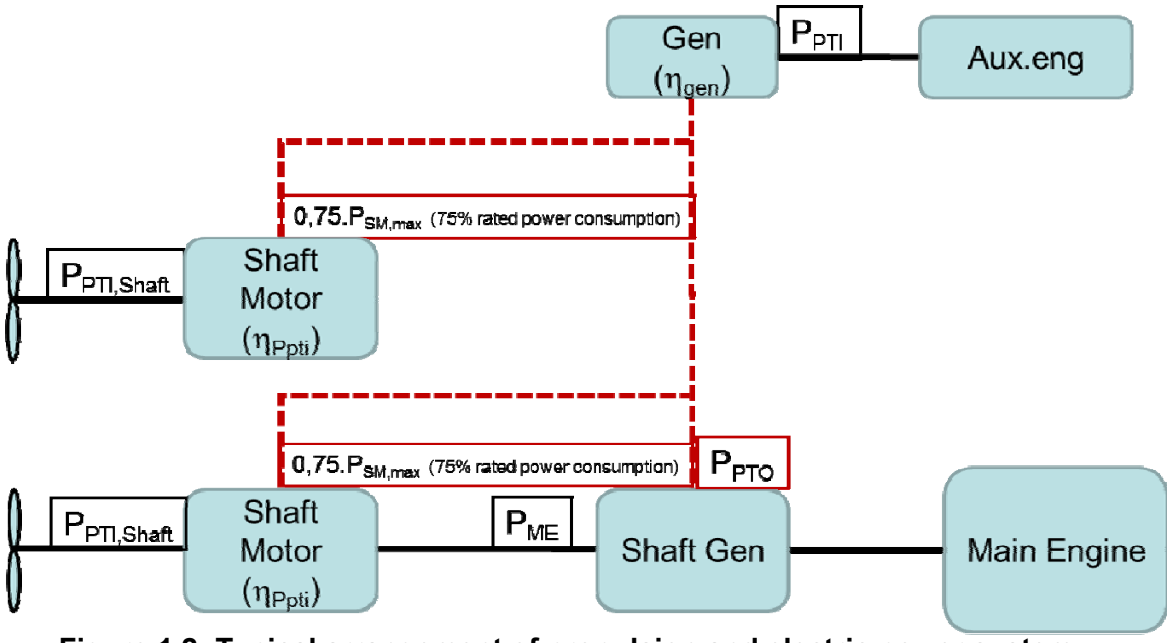

Figure 1.2: Typical arrangement of propulsion and electric power system

6.5 Calculation examples

For these calculation examples the ships' following main parameters are set as:

MCR_{ME} = 20,000 kW
Capacity = 20,000 DWT
$C_{F,ME}$ = 3.206
$C_{F,AE}$ = 3.206
SFC_{ME} = 190 g/kWh
SFC_{AE} = 215 g/kWh
V_{ref} = 20 kn (without shaft generator/motor)

6.5.1 One main engine, no shaft generator

$$MCR_{ME} = 20{,}000kW$$
$$P_{ME} = 0.75 \times MCR_{ME} = 0.75 \times 20{,}000kW = 15{,}000kW \; P_{AE} = (0.025 \times 20{,}000) + 250kW = 750kW$$

$$EEDI = ((15{,}000 \times 3.206 \times 190) + (750 \times 3.206 \times 215))/(20 \times 20{,}000) = 24.1 \; g \; CO_2 / t \; nm$$

6.5.2 One main engine, 0.75 x P_{PTO}<P_{AE}, option 1

$MCR_{PTO} = 500kW$
$P_{PTO} = 500kW \times 0.75 = 375kW$
$MCR_{ME} = 20{,}000kW$
$P_{ME} = 0.75 \times MCR_{ME} - 0.75 \times P_{PTO} = 0.75 \times 20{,}000kW - 0.75 \times 375kW = 14{,}719kW$
$P_{AE} = (0.025 \times MCR_{ME}) + 250kW = 750kW$
$V_{ref} = 19.89kn$: The speed at P_{ME} determined from the power curve
$EEDI = (P_{ME} \times C_{F,ME} \times SFC_{ME}) + (0.75 \times P_{PTO} \times C_{F,ME} \times SFC_{ME}) + ((P_{AE} - 0.75 \times P_{PTO}) \times C_{F,AE} \times SFC_{AE})/(DWT \times V_{ref})$

$= 23.8\ g\ CO_2 / t\ nm \approx$

6.5.3 One main engine, 0.75 x P_{PTO}=P_{AE}, option 1

$MCR_{PTO} = 1{,}333kW$
$P_{PTO} = 1{,}333kW \times 0.75 = 1{,}000kW$
$MCR_{ME} = 20{,}000kW$
$P_{ME} = 0.75 \times MCR_{ME} - 0.75 \times P_{PTO}) = 0.75 \times 20{,}000kW - 0.75 \times 1{,}000kW = 14{,}250kW$
$P_{AE} = (0.025 \times MCR_{ME}) + 250kW = 750kW$
$v_{ref} = 19.71kn$: The speed at P_{ME} determined from the power curve

$EEDI = (P_{ME} \times C_{F,ME} \times SFC_{ME}) + (0.75 \times P_{PTO} \times C_{F,ME} \times SFC_{ME})/(DWT \times V_{ref})$

$= 23.2\ g\ CO_2 / t\ nm \approx 4\%$

6.5.4 One main engine with shaft generator, 0.75 x P_{PTO}> P_{AE}, option 1

$MCR_{PTO} = 2{,}000kW$
$0.75 \times P_{PTO} = 0.75 \times 2{,}000kW \times 0.75 = 1{,}125kW > P_{AE} \Rightarrow P_{PTO} = P_{AE} / 0.75 = 1{,}000kW$
$MCR_{ME} = 20{,}000kW$
$P_{ME} = 0.75 \times MCR_{ME} - 0.75 \times P_{PTO} = 0.75 \times 20{,}000kW - 0.75 \times 1{,}000kW = 14{,}250kW$
$P_{AE} = (0.025 \times MCR_{ME}) + 250kW = 750kW$
$V_{ref} = 19.71kn$: The speed at P_{ME} determined from the power curve

$EEDI = (P_{ME} \times C_{F,ME} \times SFC_{ME}) + (0.75 \times P_{PTO} \times C_{F,ME} \times SFC_{ME})/(DWT \times V_{ref})$

$= 23.2\ g\ CO_2 / t\ nm \approx 4\%$

6.5.5 One main engine with shaft generator, 0.75 x P_{PTO}> P_{AE}, option 2

$MCR_{PTO} = 2{,}000kW$
$MCR_{ME} = 20{,}000kW$
$P_{Shaft,limit} = 18{,}000kW$
$P_{ME} = (0.75 \times P_{Shaft,limit})$=0.75×(18,000 kW)=13.500kW
$P_{AE} = (0.025 \times MCR_{ME}) + 250kW = 750kW$
$V_{ref} = 19.41kn$: The speed at P_{ME} determined from the power curve

$EEDI = (P_{ME} \times C_{F,ME} \times SFC_{ME}) + (0.75 \times P_{PTO} \times C_{F,ME} \times SFC_{ME})/(DWT \times V_{ref})$

=22.4 g CO2 / t nm ≈ 7%

6.5.6 One main engine, one shaft motor

$MCR_{ME} = 18{,}000kW$

$P_{ME} = 0.75 \times MCR_{ME} = 0.75 \times 18{,}000kW = 13{,}500kW$

$P_{AE} = \left\{0.025 \times \left(MCR_{ME} + \frac{P_{PTI}}{0.75}\right)\right\} + 250kW = \left\{0.025 \times \left(18000 + \frac{1612.9}{0.75}\right)\right\} + 250kW = 754kW$

$P_{SM,max} = 2{,}000kW$

$P_{PTI} = 0.75 \times P_{SM,max} / \eta_{Gen} = 1{,}612.9kW$

$\eta_{PTI} = 0.97$

$\eta_{Gen} = 0.93$

$P_{Shaft} = P_{ME} + P_{PTI,Shaft} = P_{ME} + (P_{PTI} \cdot \eta_{PTI}) \cdot \eta_{Gen} = 13{,}500kW + (1612.9 \cdot 0.97) \cdot 0.93 =$

$14{,}955kW$ $v_{ref} = 20kn$

$EEDI = (P_{ME} \times C_{F,ME} \times SFC_{ME}) + (P_{AE} \times C_{F,AE} \times SFC_{AE}) + (P_{PTI} \times C_{F,AE} \times SFC_{AE}) / (DWT \times V_{ref})$

$= 24.6\ g\ CO_2 / t\ nm \approx -2\%$

7 Weather factor f_w

f_w is a non-dimensional coefficient indicating the decrease of speed in representative sea conditions of wave height, wave frequency and wind speed (e.g. Beaufort Scale 6), and is taken as 1.0 for the calculation of attained EEDI.

When a calculated f_w factor is used, the attained EEDI using calculated f_w shall be presented as "attained $EEDI_{weather}$" in order to clearly distinguish it from the attained EEDI under regulations 22 in MARPOL Annex VI.

Guidelines for the calculation of the coefficient f_w for the decrease of ship speed in respective sea conditions are provided in MEPC.1/Circ.796, as amended.

8 Correction factor for ship specific design elements f_j

Except in the cases listed below, the value of the f_j factor is 1.0.

For Finnish-Swedish ice class notations or equivalent notations of the Classification Societies, the f_j power correction factor is indicated in the IMO Calculation Guidelines[4].

For shuttle tankers with propulsion redundancy defined as oil tankers between 80,000 and 160,000 deadweight equipped with dual-engines and twin-propellers and assigned the class notations covering dynamic positioning and propulsion redundancy, the f_j factor is 0.77.

The total shaft propulsion power of shuttle tankers with redundancy is usually not limited by verified technical means.

For ro-ro cargo and ro-ro passenger ships, the correction factor f_{jRoRo} is to be computed according to the IMO calculation Guidelines.

For general cargo ships, the correction factor f_j is to be computed according to the IMO Calculation Guidelines.

f_j factors for ice-class and for ship's type can be cumulated (multiplied) for ice-classed general cargo ships or ro-ro cargo or ro-ro passenger ships.

9 Capacity factor f_i and Correction Factor f_m for ice-classed ships having IA Super or IA

Except in the cases listed below, the value of the f_i factor is 1.0.

For Finnish-Swedish ice class notations or equivalent notations of the Classification Societies, the f_i capacity correction factor is indicated in the IMO Calculation Guidelines.[4]

For a ship with voluntary structural enhancement, the f_{iVSE} ship specific voluntary structural enhancement factor is to be computed according to the IMO Calculation Guidelines.

For bulk carriers and oil tankers built in accordance with the Common Structural Rules and assigned the class notation CSR, the f_{iCSR} factor is to be computed according to the IMO Calculation Guidelines.

f_i capacity factors can be cumulated (multiplied), but the reference design for calculation of f_{iVSE} is to comply with the ice notation and/or Common Structural Rules as the case may be.

For ice-classed ships having IA Super or IA, the factor, f_m = 1.05 should apply according to 2.2.19 of the IMO Calculation Guidelines.

10 Cubic capacity correction factor f_c and cargo gears factor f_l

Except in the cases listed below, the value of the f_c and f_l factors is 1.0.

For chemical tankers as defined in regulation 1.16.1 of MARPOL Annex II, the f_c factor is to be computed according to the IMO Calculation Guidelines.

For gas carriers having direct diesel driven propulsion constructed or adapted and used for the carriage in bulk of liquefied natural gas, the f_c factor is to be computed according to the IMO Calculation Guidelines. This factor is not to be applied to LNG carriers defined in regulation 2.2.16 of MARPOL Annex VI.

For ro-ro passenger ships having a DWT/GT-ratio of less than 0.25, the cubic capacity correction factor f_{cRoPax} is to be computed according to the IMO Calculation Guidelines.

For bulk carriers having R of less than 0.55 (e.g. wood chip carriers), the cubic capacity correction factor, fc bulk carriers designed to carry light cargoes, = R-0.15 should apply according to the IMO Calculation Guidelines. where, R is the capacity ratio of the deadweight of the ship (tonnes) divided by the total cubic capacity of the cargo tanks of the ship (m3)

For general cargo ships only equipped with cranes, side loaders or ro-ro ramps, the f_l correction factor is to be computed according to the IMO Calculation Guidelines.

11 Innovative energy efficient technologies

Innovative energy efficient technologies are to be taken into account according to the 2021 Guidance on treatment of innovative energy efficiency technologies for calculation and verification of the attained EEDI and EEXI, MEPC.1/Circ.896.

[4] Tables 1 and 2 in IMO Calculation Guidelines refer to Finnish/Swedish ice classed ships usually trading in the Baltic Sea. Justified alternative values for fi and fj factors may be accepted for ice-classed ships outside this scope of application (e.g. very large ships or POLAR CLASS)

12 Example of calculation

12.1 List of input parameters for calculation of EEDI

The input parameters used in the calculation of the EEDI are provided in Table 1.

The values of all these parameters are to be indicated in the EEDI Technical File and the documents listed in the “source” column are to be submitted to the verifier.

For electrical generator, the rated electrical output in kW is related to the rated apparent power output in kVA by the following relation: MCR_{PTO} (kW) = KVA_{PTO} * 0.8 where 0.8 is the conventional power factor.

Table 1: input parameters for calculation of EEDI

Symbol	Name	Usage	Source	Scope
	Service notation	Capacity, f_i, f_j and f_c factors		For the ship
	Class notations	fj for shuttle tanker, f_{iCSR}	Classification file	
	Ice notation	fi, fj for ice class		
Lpp	Length between perpendiculars (m)	fi, fj for ice class, f_{jRoRo}, f_j for general cargo ships		
B_S	Breadth (m)	f_{jRoRo}, f_j for general cargo ships		
d_S	Summer load line draught (m)	f_{jRoRo}, f_j for general cargo ships		
∇	Volumetric displacement	f_{jRoRo}, f_j for general cargo ships		
Δ	Displacement @ summer load draught (t)	deadweight, f_{iVSE}, f_{cRoPax}, f_l for general cargo ships, f_c for bulk carriers	final stability file	
LWT	Ligthweight (t)	deadweight, f_{iVSE}, f_{iCSR}, f_{cRoPax} f_l for general cargo ships	Sheets of Submitter calculation for $lightweight_{referencedesign}$ lightweight check report	
GT	Gross tonnage	Capacity, f_{cRoPax}		
P_{AE}	Auxiliary engine power (kW)	EEDI	Note: Computed from engines & PTIs powers or electric power table	
V_{ref}	Reference speed (knot)	EEDI, f_{jRoRo}, f_j for general cargo ships	Sea trial report	
Cube	Total cubic capacity of the cargo tanks (m3)	f_c for chemical tankers and gas carriers	Tonnage file	
Vgas(or liquid)	Tank volume for fuels (m3)	f_{DFgas}, $f_{DFliquid}$ availability ratios	Capacity plan	
SWL	Safe working load of the crane (t)	f_l for general cargo ships		
Reach	Reach of the crane (m)	f_l for general cargo ships		

Symbol	Name	Usage	Source	Scope
MCR	Rated installed power (kW)	P_{ME}	EIAPP certificate or nameplate (if less than 130 kW)	Per engine (nME + nGEN)
MCR_{lim}	Limited rated output power after PTO in (kW)	P_{ME} with PTO option 2	Verification file	
MPP_{Motor}	Rated output of motor (kW)	P_{ME} for LNG carriers having diesel electric propulsion system	Certificate of the product	
η	Electrical efficiency	P_{ME} for LNG carriers having diesel electric propulsion system		
$MCR_{SteamTurbine}$	Rated installed power (kW)	P_{ME} for LNG carriers having steam turbine propulsion system	Certificate of the product	
	Fuel grade	C_F, SFC	NOX Technical File of the parent engine	
SFC	Corrected specific fuel consumption (g/kWh)	EEDI	NOx Technical File of the parent engine	
KVA_{PTO}	Rated electrical apparent output power (kVA)	P_{ME}	Nameplate of the shaft generator	Per shaft generator (nPTO)
$P_{PTI,Shaft}$	Mechanical output power (kW)	EEDI	Nameplate of the shaft motor	Per shaft motor (nPTI)
η_{PTI}	efficiency	power		
η_{GEN}	efficiency	power		Per generator (nGEN)
$P_{SHAFTlim}$	Limited shaft propulsion power (kW)	Limited power where means of limitation are fitted	Verification file	Per shaftline (nSHAFT)

12.2 Sample calculation of EEDI

A sample of document to be submitted to the verifier is provided in Appendix 2. In addition,

Appendix 6 contains a list of sample calculations of EEDI, as follows:

- Appendix 6.1: Cruise passenger ship with diesel-electric propulsion
- Appendix 6.2: LNG carrier with diesel-electric propulsion
- Appendix 6.3: Diesel-driven LNG carrier with re-liquefaction system
- Appendix 6.4: LNG carrier with steam turbine propulsion

Part III - Verification of EEDI

13 Verification process

Attained EEDI is to be computed in accordance with the IMO Calculation Guidelines and Part II of the present Industry Guidelines. Survey and certification of the EEDI are to be conducted according to the IMO verification Guidelines. on two stages:

1. preliminary verification at the design stage
2. final verification at the sea trial

The flow of the survey and certification process is presented in Figure 2.

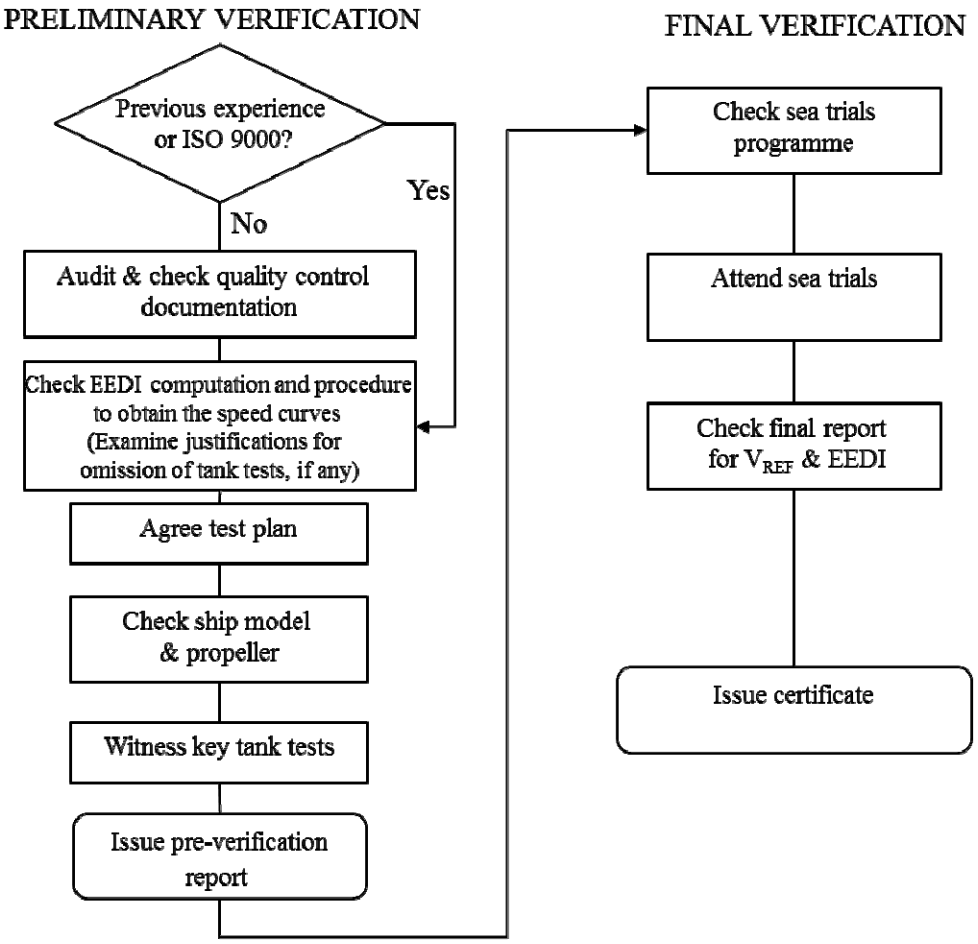

Figure 2: Flow of survey and certification process by verifier

14 Documents to be submitted

A sample of documents to be submitted to the verifier including additional information for verification is provided in Appendix 2.

The following information/documents are to be submitted by the submitter to the verifier at the design stage. Reference is to be made also to Appendix 1, Appendix 3 and Appendix 4

Table 2: documents to be submitted at the design stage

EEDI Technical File	EEDI Technical File as defined in the IMO Verification Guidelines. See example of the EEDI Technical File in Appendix 1 of IMO Verification Guidelines.
NOx Technical File	Copy of the NOx Technical File and documented summary of the SFC correction for each type of main and auxiliary engine with copy of EIAPP certificate. Note: if the NOx Technical File has not been approved at the time of the preliminary verification, the SFC value with the addition of the guarantee tolerance is to be provided by Manufacturer. In this case, the NOx Technical File is to be submitted at the final verification stage.
Electric Power Table	If P_{AE} is significantly different from the values computed using the formula in the IMO Calculation Guidelines
Ship lines and model particulars	- Lines of ship - Report including the particulars of the ship model and propeller model
Verification file of power limitation technical arrangement	If the propulsion power is voluntarily limited by verified technical means
Power curves	Power-speed curves predicted at full scale in sea trial condition and EEDI condition
Description of the towing tank test facility and towing tank test organisation quality manual	If the verifier has no recent experience with the towing tank test facility and the towing tank test organization quality system is not ISO 9001 certified. - Quality management system of the towing tank test including process control, justifications concerning repeatability and quality management processes - Records of measuring equipment calibration as described in Appendix 3 - Standard model-ship extrapolation and correlation method (applied method and tests description)
Gas fuel oil general arrangement plan	If gas fuel is used as the primary fuel of the ship fitted with dual fuel engines. Gas fuel storage tanks (with capacities) and bunkering facilities are to be described.
Towing Tank Tests Plan	Plan explaining the different steps of the towing tank tests and the scheduled inspections allowing the verifier to check compliance with the items listed in Appendix 1 concerning tank tests
Towing Tank Tests Report	- Report of the results of the towing tank tests at sea trial and EEDI condition as required in Appendix 4 - Values of the experience-based parameters defined in the standard model-ship correlation method used by the towing tank test organization/shipyard - Reasons for exempting a towing tank test, only if applicable - Numerical calculations report and validation file of these calculations, only if calculations are used to derive power curves
Ship reference speed V_{ref}	Detailed calculation process of the ship speed, which is to include the estimation basis of experience-based parameters such as roughness coefficient, wake scaling coefficient

The following information is to be submitted by the submitter to the verifier at the final verification stage (and before the sea trials for the programme of sea trials):

Table 3: documents to be submitted at the final verification stage

Programme of sea trials	Description of the test procedure to be used for the speed trial, with number of speed points to be measured and indication of PTO/PTI to be in operation, if any.
Sea trials report	Report of sea trials with detailed computation of the corrections allowing determination of the reference speed V_{ref}
Final stability file	Final stability file including lightweight of the ship and displacement table based on the results of the inclining test or the lightweight check
Final power curves	Final power curve in the EEDI condition showing the speed adjustment methodology
Revised EEDI Technical File	Including identification of the parameters differing from the calculation performed at the initial verification stage
Ship lines	Lines of actual ship

Concerning confidential information of submitters that may be contained in the above mentioned documents, reference is to be made to IMO Verification Guidelines,

15 Preliminary verification at the design stage

15.1 Scope of the verifier work

For the preliminary verification of the EEDI at the design stage, the verifier:

- Review the EEDI Technical File, check that all the input parameters (see 12.1 above) are documented and justified and check that the possible omission of a towing tank test has been properly justified
- Check that the ITTC procedures and quality system are implemented by the organization conducting the towing tank tests. The verifier should possibly audit the quality management system of the towing tank if previous experience is insufficiently demonstrated
- Witness the towing tank tests according to a test plan initially agreed between the submitter and the verifier
- Check that the work done by the towing tank test organisation is consistent with the present Guidelines. In particular, the verifier will check that the power curves at full scale are determined in a consistent way between sea trials and EEDI loading conditions, applying the same calculation process of the power curves and considering justifiable differences of experience based parameters between the two conditions
- Issue a pre-verification report

15.2 Definitions

Experience-based parameters means parameters used in the determination of the scale effects coefficients of correlation between the towing tank model scale results and the full scale predictions of power curves.
This may include:

1. Hull roughness correction
2. Wake correction factor
3. Air resistance correction factor (due to superstructures and deck load)
4. Appendages correction factor (for appendages not present at model scale)

5. Propeller cavitation correction factor
6. Propeller open-water characteristics correction
7. C_P and C_N (see below)
8. ΔC_{FC} and Δw_C (see below)

Ship of the same type means a ship of which hull form (expressed in the lines such as sheer plan and body plan) excluding additional hull features such as fins and of which principal particulars are identical to that of the base ship.

Definition of survey methods directly involving the verifier: Review and Witness.
Review means the act of examining documents in order to determine identification and traceability and to confirm that requested information are present and that EEDI calculation process conforms to relevant requirements.

Witness means the attendance at scheduled key steps of the towing tank tests in accordance with the agreed Test Plan to the extent necessary to check compliance with the survey and certification requirements.

15.3 Towing tank tests and numerical calculations

There are two loading conditions to be taken into account for EEDI: EEDI loading condition and sea trial condition.

The speed power curves for these two loading conditions are to be based on towing tank test measurements. Towing tank test means model towing tests, model self-propulsion tests and model propeller open water tests.

Numerical calculations may be accepted as equivalent to model propeller open water tests.

Possible omission of towing tank tests is addressed in the IMO Verification Guidelines

Numerical calculations may be submitted to justify derivation of speed power curves, where only one parent hull form have been verified with towing tank tests, in order to evaluate the effect of additional hull features such as fore bulb variations, fins and hydrodynamic energy saving devices.

These numerical tests may include CFD calculation of propulsive efficiency at reference speed V_{ref} as well as hull resistance variations and propeller open water efficiency.

In order to be accepted, these numerical tests are to be carried out in accordance with defined quality and technical standards (ITTC 7.5-03-01-04 at its latest revision or equivalent). The comparison of the CFD-computed values of the unmodified parent hull form with the results of the towing tank tests must be submitted for review.

15.4 Qualification of verifier personnel

Surveyors of the verifier are to confirm through review and witness as defined in 15.2 that the calculation of EEDI is performed according to the relevant requirements listed in 1.1. The surveyors are to be qualified to be able to carry out these tasks and procedures are to be in place to ensure that their activities are monitored.

15.5 Review of the towing tank test organisation quality system

The verifier is to familiarize with the towing tank test organization test facilities, measuring equipment, standard model-ship extrapolation and correlation method (applied method and tests description) and quality system for consideration of complying with the requirements of 15.6 prior to the test attendance when the verifier has no recent experience of the towing tank test facilities.

When in addition the towing tank test organization quality control system is not certified according to a recognized scheme (ISO 9001 or equivalent) the following additional information relative to the towing tank test organization is to be submitted to the verifier:

1. descriptions of the towing tank test facility; this includes the name of the facility, the particulars of towing tanks and towing equipment, and the records of calibration of each monitoring equipment as described in Appendix 3

2. quality manual containing at least the information listed in the ITTC Sample quality manual (2002 issue) Records of measuring equipment calibration as described in Appendix 3

15.6 Review and Witness

The verifier is to review the EEDI Technical File, using also the other documents listed in table 2 and submitted for information in order to verify the calculation of EEDI at design stage. This review activity is described in Appendix 1. Since detailed process of the towing tank tests depends on the practice of each submitter, sufficient information is to be included in the document submitted to the verifier to show that the principal scheme of the towing tank test process meets the requirements of the reference documents listed in Appendix 1 and Appendix 4.

Prior to the start of the towing tank tests, the submitter is to submit a test plan to the verifier. The verifier reviews the test plan and agrees with the submitter which scheduled inspections will be performed with the verifier surveyor in attendance in order to perform the verifications listed in Appendix 1 concerning the towing tank tests.

Following the indications of the agreed test plan, the submitter will notify the verifier for the agreed tests to be witnessed. The submitter will advise the verifier of any changes to the activities agreed in the Test Plan and provide the submitter with the towing tank test report and results of trial speed prediction.

15.7 Model-ship correlation

Model-ship correlation method followed by the towing tank test organization or shipyard is to be properly documented with reference to the 1978 ITTC Trial prediction method given in ITTC Recommended Procedure 7.5-02-03-1.4 rev.02 of 2011 or subsequent revision, mentioning the differences between the followed method and the 1978 ITTC trial prediction method and their global equivalence.

Considering the formula giving the total full scale resistance coefficient of the ship with bilge keels and other appendages:

$$C_{TS} = \frac{S_S + S_{BK}}{S_S} \cdot [(1+k) \cdot C_{FS} + \Delta C_F + C_A] + C_R + C_{AAS} + C_{AppS}$$

The way of calculating the form factor k, the roughness allowance ΔC_F, the correlation allowance C_A, the air resistance coefficient C_{AAS} and the appendages coefficient C_{AppS} are to

be documented (if they are taken as 0, this has to be indicated also), as indicated in Appendix 4.

The correlation method used is to be based on thrust identity and the correlation factors is to be according to method 1 ($C_P – C_N$) or method 2 (ΔC_{FC} - Δw_C) of the 1978 ITTC Trial prediction method. If the standard method used by the towing tank test organization doesn't fulfil these conditions, an additional analysis based on thrust identity is to be submitted to the verifier.

The verifier will check that the power-speed curves obtained for the EEDI condition and sea trial condition are obtained using the same calculation process and properly documented as requested in Appendix 4 "Witnessing of model test procedures". In particular, the verifier will compare the differences between experience based coefficients Cp and ΔC_{FC} between the EEDI condition (∇_{full}) and sea trial condition if different from EEDI condition (∇) with the indications given in Figures 3.1 and 3.2 extracted from a SAJ-ITTC study on a large number of oil tankers. If the difference is significantly higher than the values reported in the Figures, a proper justification of the values is to be submitted to the verifier.

NB: The trends in Figures 3.1 and 3.2 are based on limited data and may be revised in the future. The displayed trends depend on the method used to analyze the model tests behind the data including the form factor and other correlation factor relations. Other values may be accepted if based on sufficient number of data.

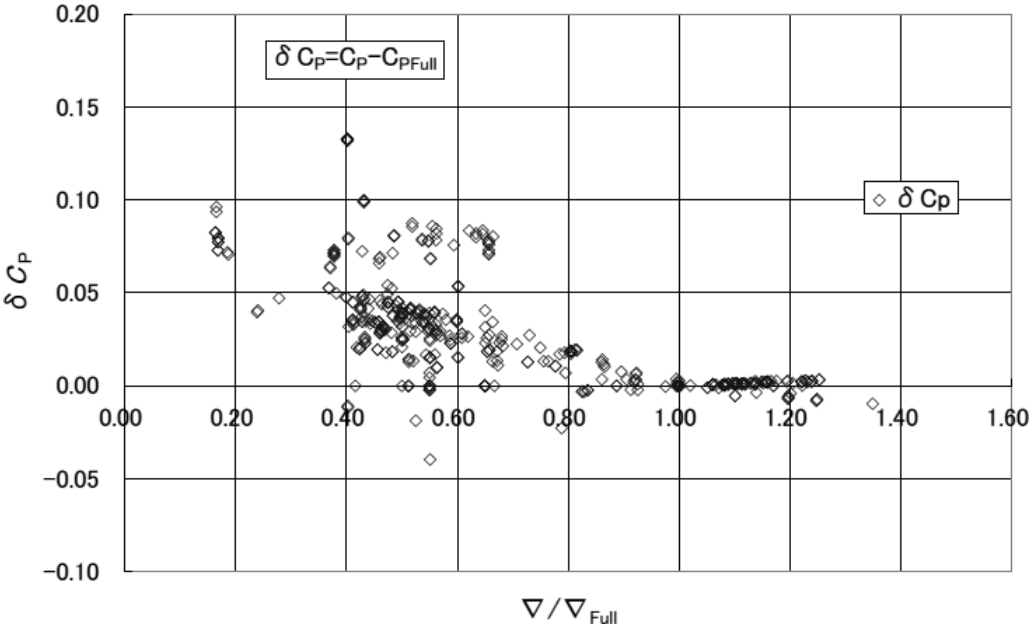

Figure 3.1: Variation of C_P- C_{PFull} as a function of the displacement ratio

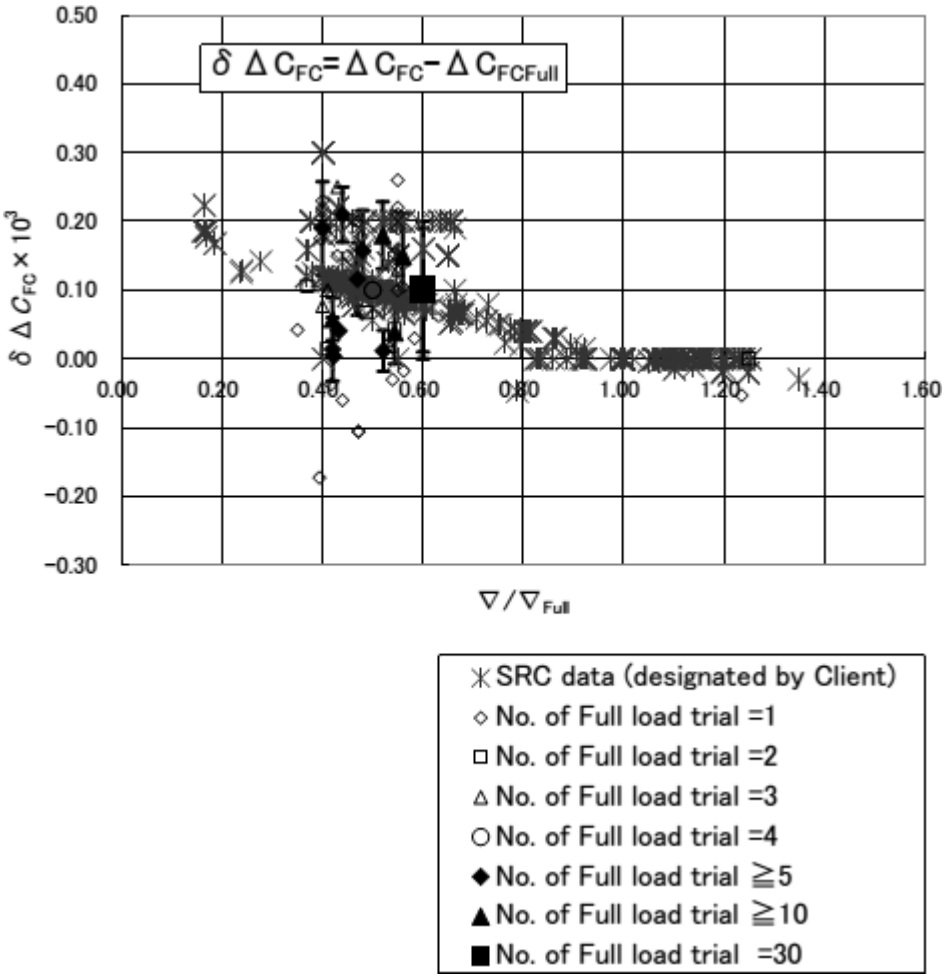

Figure 3.2: Variation of ΔC_{FC} as a function of the displacement ratio

15.8 Pre-verification report

The verifier issues the report on the "Preliminary Verification of EEDI" after it has verified the attained EEDI at the design stage in accordance with paragraphs 4.1 and 4.2 of the IMO Verification Guidelines.

A sample of the report on the “Preliminary Verification of EEDI” is provided in Appendix 5.

16 Final verification at sea trial

16.1 Sea trial procedure

For the verification of the EEDI at sea trial stage, the verifier shall:

- Examine the programme of the sea trial to check that the test procedure and in particular that the number of speed measurement points comply with the requirements of the IMO Verification Guidelines (see note below).
- Perform a survey to ascertain the machinery characteristics of some important electric load consumers and producers included in the EPT, if the power P_{AE} is directly computed from the EPT data’s.
- Attend the sea trial and notes the main parameters to be used for the final calculation of the EEDI, as given under 4.3.3 of the IMO Verification Guidelines

- Review the sea trial report provided by the submitter and check that the measured power and speed have been corrected accordingly (see note below).
- Check that the power curve estimated for EEDI condition further to sea trial is obtained by power adjustment.
- Review the revised EEDI Technical File.
- Issue or endorse the International Energy Efficiency Certificate.

Note: For application of the present Guidelines, sea conditions and ship speed should be measured in accordance with ITTC Recommended Procedure 7.5-04-01-01.1 Speed and Power Trials 2017 or ISO 15016:2015.

Table 4 lists data which are to be measured and recorded during sea trials:

Table 4: Measured data during sea trials

Symbol	Name	Measurement	Remark
	Time and duration of sea trial		
	Draft marks readings		
	Air and sea temperature		
	Main engine setting	Machinery log	
Ψ_0	Course direction (rad)	Compass	
V_G	Speed over ground (m/s)	GPS	
n	Propeller rpm (rpm)	Tachometer	
P_S	Power measured (kW)	Torsion meter or strain gauges (for torque measurement) or any alternative method that offer an equivalent level of precision and accuracy of power measurement	
V_{WR}	Relative wind velocity (m/s)	Wind indicator	
Ψ_{WR}	Relative wind direction (rad)	See above	
T_m	Mean wave period (seas and swell) (s)	Visual observation by multiple observers supplemented by hindcast data or wave measuring devices (wave buoy, wave radar, etc.)	
$H_{1/3}$	Significant wave height (seas and swell) (m)	See above	
χ	Incident angle of waves (seas and swell) (rad)	See above	
δ_R	Rudder angle (rad)	Rudder	
β	Drift angle (rad)	GPS	

Prior to the sea trial, the programme of the sea trials and , if available, additional documents listed in table 3 are to be submitted to the verifier in order for the verifier to check the procedure and to attend the sea trial and perform the verifications included in Appendix 1 concerning the sea trial.

The ship speed is to be measured at sea trial for at least three power settings of which range includes the total propulsion power defined in 5.2 according to the requirements of the IMO Verification Guidelines 4.3.6. This requirement applies individually to each ship, even if the ship is a sister ship of a parent vessel.

If it is physically impossible to meet the conditions in the ISO15016:2015 or ITTC Recommended Procedure 7.5-04-01-01, a practical treatment shall be allowed based on the documented mutual agreement among the owner, the verifier and the shipbuilder.

16.2 Estimation of the EEDI reference speed V_{Ref}

The adjustment procedure is applicable to the most complex case where sea trials cannot be conducted in EEDI loading condition. It is expected that this will be usually the case for cargo ships like bulk carriers for instance.

Ship speed should be measured in accordance with ISO 15016:2015 or ITTC Recommended Procedure 7.5-04-01-01.1, including the accuracy objectives under introduction section of ISO 15016:2015. In particular, if the shaft torque measurement device cannot be installed near the output flange of main engine, then the efficiency from the measured shaft power to brake horse power should be taken into account.

Using the speed-power curve obtained from the sea trials in the trial condition, the conversion of ship's speed from the trial condition to the EEDI condition shall be carried out by power adjustment as defined in Annex I of ISO 15016:2015.

The reference speed V_{ref} should be determined based on sea trials which have been carried out and evaluated in accordance with ISO 15016:2015 or equivalent (see note in 16.1).

Reference is made to paragraph 3 of Appendix 2 (Figure 3.1) where an example is provided.

16.3 Revision of EEDI Technical File

Reference is to be made to para 4.3.13 and para 4.3.14 of the IMO Verification Guidelines.

17 Verification of the EEDI in case of major conversion

In this section, a major conversion is defined as in MARPOL Annex VI regulation 2.2.17 and interpretations in MEPC.1/Circ.795/ Rev6 subject to the approval of the Administration.

For verification of the attained EEDI after a major conversion, no speed trials are necessary if the conversion or modifications don't involve a variation in reference speed.

In case of conversion, the verifier will review the modified EEDI Technical File. If the review leads to the conclusion that the modifications couldn't cause the ship to exceed the applicable required EEDI, the verifier will not request speed trials.

If such conclusion cannot be reached, like in the case of a lengthening of the ship, or increase of propulsion power of 10% or more, speed trials will be required.

If an Owner voluntarily requests re-certification of EEDI with IEE Certificate reissuance on the basis of an improvement to the ship efficiency, the verifier may request speed trials in order to validate the attained EEDI value improvement.

If speed trials are performed after conversion or modifications changing the attained EEDI value, tank tests verification is to be requested if the speed trials conditions differ from the EEDI condition. In this case, numerical calculations performed in accordance with defined quality and technical standards (ITTC 7.5-03-01-04 at its latest revision or equivalent) replacing tank tests may be accepted by the verifier to quantify influence of the hull modifications.

In case of major conversion of a ship without prior EEDI, EEDI computation is not required, except if the Administration considers that due to the extensive character of the conversion, the ship is to be considered as a new one.

APPENDIX 1
Review and witness points

Ref.	Function	Survey method	Reference document	Documentation available to verifier	Remarks
01	EEDI Technical File	Review	IMO Verification Guidelines This document	Documents in table 2	
02	Limitation of power	Review	IMO Calculation Guidelines	Verification file of limitation technical means	Only If means of limitation are fitted
03	Electric Power Table	Review	Appendix 2 to IMO Calculation Guidelines Appendix 2 to IMO Verification Guidelines	EPT EPT-EEDI form	As described under paragraph 5.2 of this industry guideline.
04	Calibration of towing tank test measuring equipment	Review & witness	Appendix 3	Calibration reports	Check at random that measuring devices are well identified and that calibration reports are currently valid
05	Model tests – ship model	Review & witness	Appendix 4	Ship lines plan & offsets table Ship model report	Checks described in Appendix 4.1
06	Model tests – propeller model	Review & witness	Appendix 4	Propeller model report	Checks described in Appendix 4.2
07	Model tests – Resistance test, Propulsion test, Propeller open water test	Review & witness	Appendix 4	Towing tank tests report	Checks described in Appendix 4.3 Note: propeller open water test is not needed if a stock propeller is used. In this case, the open water characteristics of the stock propeller are to be annexed to the towing tank tests report.

Ref.	Function	Survey method	Reference document	Documentation available to verifier	Remarks
08	Model-ship extrapolation and correlation	Review	ITTC 7.5-02-03-01.4 1978 ITTC performance prediction method (rev.04 of 2017 or subsequent revision) Appendix 4 This document 15.7	Documents in table 2	Check that the ship-model correlation is based on thrust identity with correlation factor according to method 1 ($C_P – C_N$) or method 2 (ΔC_{FC} - Δw_C) Check that the power-speed curves obtained for the EEDI condition and sea trial condition are obtained using the same calculation process with justified values of experience-based parameters
09	Numerical calculations replacing towing tank tests	Review	ITTC 7.5-03-01-04 (latest revision) or equivalent	Report of calculations	For justification of calculations replacing model tests refer to 15.3.
10	Electrical machinery survey prior to sea trials	Witness	Appendix 2 to IMO Verification Guidelines		Only if P_{AE} is computed from EPT
11	Programme of sea trials	Review	IMO Verification Guidelines	Programme of sea trials	Check minimum number of measurement points (3) Check the EEDI condition in EPT (if P_{AE} is computed from EPT)
12	Sea trials	Witness	ISO 15016:2015 or ITTC 7.5-04-01-01.1 (latest revision)		Check: • Propulsion power, particulars of the engines • Draught and trim • Sea conditions • Ship speed • Shaft power & rpm Check operation of means of limitations of engines or shaft power (if fitted) Check the power consumption of selected consumers included in sea trials condition EPT (if P_{AE} is computed from EPT)

Ref.	Function	Survey method	Reference document	Documentation available to verifier	Remarks
13	Sea trials – corrections calculation	Review	ISO 15016:2015 or ITTC Recommended Procedure 7.5-04-01-01.1(latest revision)	Sea trials report	Check that the displacement and trim of the ship in sea trial condition has been obtained with sufficient accuracy Check compliance with ISO 15016:2015 or ITTC Recommended Procedure 7.5-04-01-01.1(latest revision)
14	Sea trials – adjustment from trial condition to EEDI condition	Review	This document 16.2	Power curves after sea trial	Check that the power curve estimated for EEDI condition is obtained by power adjustment
15	EEDI Technical File – revised after sea trials	Review	IMO Verification Guidelines	Revised EEDI Technical File	Check that the file has been updated according to sea trials results

APPENDIX 2

Sample of document to be submitted to the verifier including additional information for verification

Caution

Protection of Intellectual Property Rights

This document contains confidential information (defined as additional information) of submitters. Additional information should be treated as strictly confidential by the verifier and failure to do so may lead to penalties. The verifier should note following requirements of IMO Verification Guidelines:
"*4.1.2 The information used in the verification process may contain confidential information of submitters, which requires Intellectual Property Rights (IPR) protection. In the case where the submitter want a non-disclosure agreement with the verifier, the additional information should be provided to the verifier upon mutually agreed terms and*

Revision list

B	01/05/2014	Final stage: sections 1 to 16	XYZ	YYY	ZZZ
A	01/01/2013	Design stage: sections 1 to 13	XXX	YYY	ZZZ
REV.	**ISSUE DATE**	**DESCRIPTION**	**DRAWN**	**CHECKED**	**APPROVED**

1 General

This calculation of the Energy Efficiency Design Index (EEDI) is based on:

- All adopted MEPC resolutions regarding amendments to Chapter 4 of MARPOL Annex VI prior to the date of revision of this guideline
- Resolution MEPC.364 (79) 2022 Guidelines on the method of calculation of the attained Energy Efficiency Design Index (EEDI) for new ships, as amended.

Calculations are being dealt with according to the Industry Guidelines on calculation and verification of EEDI, 2020 issue.

2 Data

2.1 Main parameters

Parameter	Value	Reference
Owner	OWNER	
Builder	YARD	
Hull No.	12346	
IMO No.	94111XX	
Ship's type	Bulk carrier	
Ship classification notations	I HULL, MACH, Bulk Carrier CSR BC-A (holds 2 and 4 may be empty) ESP GRAB[20] Unrestricted Navigation AUT-UMS, GREEN PASSPORT, INWATERSURVEY, MON-SHAFT	
HULL PARTICULARS		
Length overall	191.0 m	
Length between perpendiculars	185.0 m	
Breadth, moulded	32.25 m	
Depth, moulded	17.9 m	
Summer load line draught, moulded	12.70 m	
Deadweight at summer load line draught	55000 DWT	
Lightweight	11590 tons	
Owner's voluntary structural enhancements	No	
MAIN ENGINE		
Type & manufacturer	BUILDER 6SRT60ME	
Specified Maximum Continuous Rating (SMCR)	9200 kW x 105 rpm	
SFC at 75% SMCR	171 g/kWh	See paragraph 10.1
Number of set	1	
Fuel type	Diesel/Gas oil	
AUXILIARY ENGINES		

Parameter	Value	Reference
Type & manufacturer	BUILDER 5X28	
Specified Maximum Continuous Rating (SMCR)	650 kW x 700 rpm	
SFC at 50% SMCR	205 g/kWh	See paragraph 10.2
SFC at 75% SMCR (In case PAE is estimated by the electric power table (EPT) for the reason that PAE computed using the formula in the IMO Calculation Guidelines is significantly different from the total power used at normal seagoing)	199 g/kWh	See paragraph 10.2
Number of set	3	
Fuel type	Diesel/Gas oil	
OVERVIEW OF PROPULSION SYSTEM AND ELECTRICITY SUPPLY SYSTEM		See section 4
SHAFT GENERATORS		
Type & manufacturer	None	
Rated electrical output power		
Number of set	0	
SHAFT MOTORS		
Type & manufacturer	None	
Rated power consumption		
Efficiency		
Number of set	0	
MAIN GENERATORS		
Type & manufacturer	BUILDER AC120	
Rated output	605 kWe	
Efficiency	0.93	
Number of set	3	
PROPULSION SHAFT		
Propeller diameter	5.9 m	
Propeller number of blades	4	
Voluntarily limited shaft propulsion power	No	
Number of set	1	
ENERGY SAVING EQUIPMENT		See section 9
Description of energy saving equipment	Propeller boss cap fins	
Power reduction or power output	None	

2.2 Preliminary verification of attained EEDI

Parameter	Value	Reference
TOWING TANK TEST ORGANIZATION		
Identification of organization	TEST corp.	See section 6.
ISO Certification or previous experience?	Previous experience	

TOWING TANK TESTS		
Exemption of towing tank tests	No	
Process and methodology of estimation of		See section 7

the power curves		
Ship model information		See subparagraph 7.2.1
Propeller model information		See subparagraph 7.2.2
EEDI & sea trial loading conditions	EEDI: mean draft: 12.7 m Trim 0 Sea trial (ballast): mean draft: 5.8 m Trim 2.6 m by stern	
Propeller open water diagram (model, ship)		See paragraph 7.4
Experience based parameters		See paragraph 7.3
Power curves at full scale		See section 3
Ship Reference speed	14.25 knots	
ELECTRIC POWER TABLE (as necessary, as defined in IMO Calculation Guidelines)	As described under paragraph 5.2 of this industry guideline.	See section 5
CALCULATION OF ATTAINED EEDI	5.06	See section 11
CALCULATION OF REQUIRED EEDI	5.27	See section 12
CALCULATION OF ATTAINED $EEDI_{weather}$	Not calculated	See section 13

2.3 Final verification of attained EEDI

Parameter	Value	Reference
SEA TRIAL LOADING CONDITION		
POWER CURVES		See section 3
Sea trial report with corrections		See section 15
Ship Reference speed	14.65 knots	
FINAL DEADWEIGHT		See section 14
Displacement	66171 tons	
Lightweight	11621 tons	
Deadweight	54550 DWT	
FINAL ATTAINED EEDI	4.96	See section 16

3 Power curves

The power curves estimated at the design stage and modified after the sea trials are given in Figure 3.1.

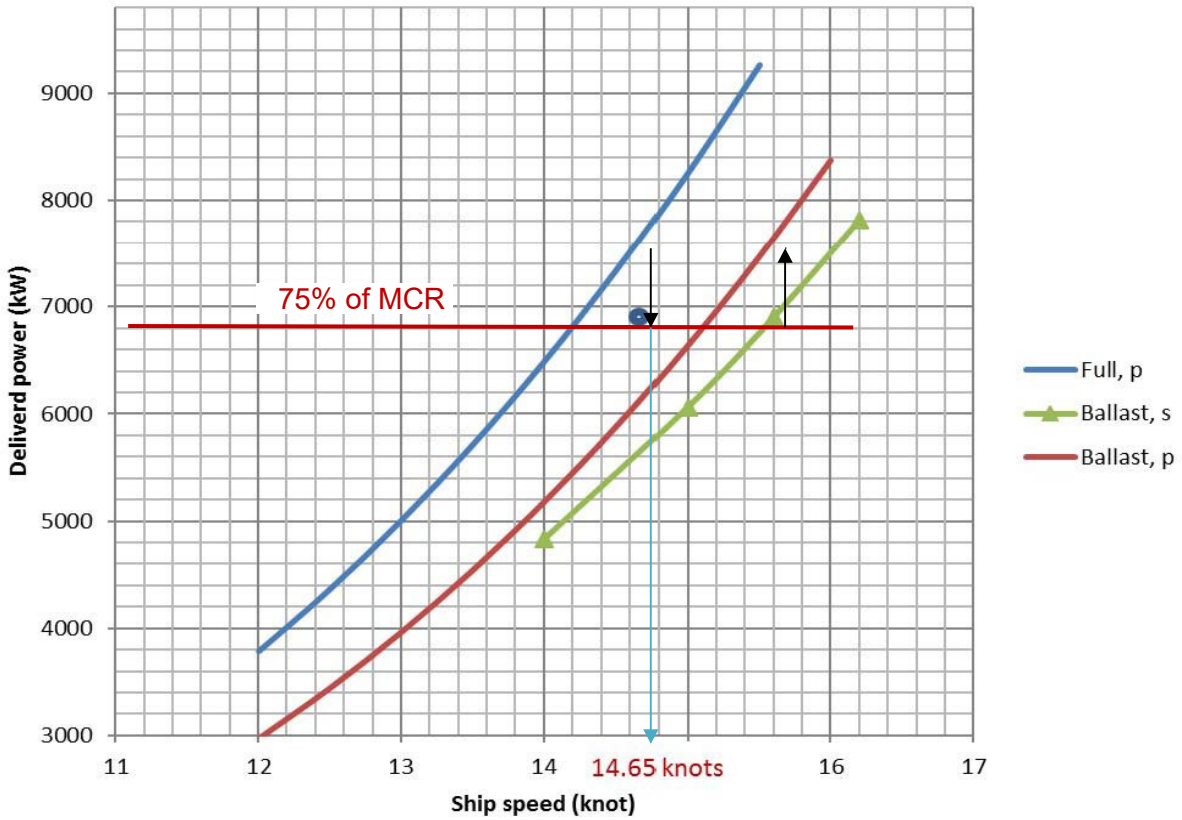

Figure 3.1: Power curves

4 Overview of propulsion system and electric power system

Figure 4.1 shows the connections within the propulsion and electric power supply systems.

The characteristics of the main engines, auxiliary engines, electrical generators and propulsion electrical motors are given in table 2.1.

Figure 4.1 scheme of the propulsion and power generation systems

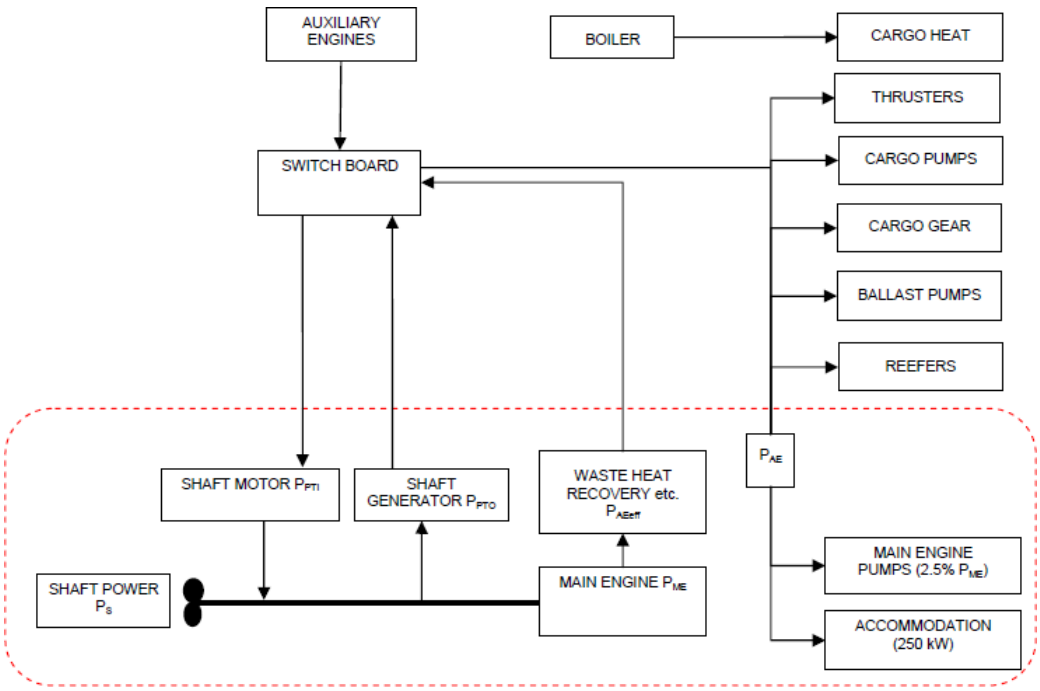

5 Electric power table

The electric power for the calculation of EEDI is provided in table 5.1.

Table 5.1: Electric power table for calculation of P_{AE}

Id	Grou p	Description	Mech. Power "Pm"	El. Motor output	Efficie n. "e"	Rated el. Power "Pr"	load facto r "kl"	duty facto r "kd"	time facto r "kt"	use facto r "ku"	Necessa ry power "Pload"
1	A	STEERING GEAR	N.A.	N.A.	N.A.	45,0	0,9	1	0,3	0,27	12.2
2	A	HULL CATHODIC PROTECTION	N.A.	N.A.	N.A.	10	1	1	1	1,00	10,0
3	A	CRANE	N.A.	N.A.	N.A.	10,00	0,2	1	1	0,20	2,0
4	A	COMPASS	N.A.	N.A.	N.A.	0,5	1	1	1	1,00	0,5
5	A	RADAR NO.1	N.A.	N.A.	N.A.	1,3	1	0,5	1	0,50	0,7
6	A	RADAR NO.2	N.A.	N.A.	N.A.	1,3	1	0,5	1	0,50	0,7
7	A	NAVIGATION EQUIPMENT	N.A.	N.A.	N.A.	5,0	1	1	1	1,00	5,0
8	A	INTERNAL COMM. EQUIPMENT	N.A.	N.A.	N.A.	2,5	1	1	0,1	0,10	0,2
9	A	RADIO EQUIPMENT	N.A.	N.A.	N.A.	3,5	1	1	0,1	0,10	0,4
10	A	MOORING EQ.	N.A.	N.A.	N.A.	7,0	1	1	0,1	0,10	0,7
11	B	MAIN COOLING SEA WATER PUMP NO.1	28,0	30	0,925	30,3	0,9	0,66	1	0,59	18,0
12	B	MAIN COOLING SEA WATER PUMP NO.2	28,0	30	0,925	30,3	0,9	0,66	1	0,59	18,0
13	B	MAIN COOLING SEA WATER PUMP NO.3	28,0	30	0,925	30,3	0,9	0,66	1	0,59	18,0
14	B	LT COOLING FW PUMP NO.1	28,0	30	0,925	30,3	0,9	0,66	1	0,59	18,0
15	B	LT COOLING FW PUMP NO.2	28,0	30	0,925	30,3	0,9	0,66	1	0,59	18,0
16	B	LT COOLING FW PUMP NO.3	28,0	30	0,925	30,3	0,9	0,66	1	0,59	18,0

Id	Grou p	Description	Mech. Power "Pm"	El. Motor output	Efficie n. "e"	Rated el. Power "Pr"	load facto r "kl"	duty factor "kd"	time facto r "kt"	use facto r "ku"	Neces sa ry power "Ploa d"
17	B	M/E COOLING WATER PUMP NO.1	13,0	15	0,9	14,4	1	0,5	1	0,50	7,2
18	B	M/E COOLING WATER PUMP NO.2	13,0	15	0,9	14,4	1	0,5	1	0,50	7,2
19	C	MAIN LUB. OIL PUMP NO.1	55,0	90	0,94	58,5	0,9	0,5	1	0,45	26,3
20	C	MAIN LUB. OIL PUMP NO.2	55,0	90	0,94	58,5	0,9	0,5	1	0,45	26,3
21	C	H.F.O. TRANSFER PUMP	6,0	7,5	0,88	6,8	1	1	0,1	0,10	0,7
22	C	D.O. TRANSFER PUMP	6,0	7,5	0,88	6,8	1	1	0,1	0,10	0,7
23	C	L.O. TRANSFER PUMP	1,4	2,5	0,8	1,8	1	1	0,1	0,10	0,2
24	C	TECHNICAL FRESH WATER PUMP NO.1	2,5	3,5	0,85	2,9	1	0,5	0,1	0,05	0,1
25	C	TECHNICAL FRESH WATER PUMP NO.2	2,5	3,5	0,85	2,9	1	0,5	0,1	0,05	0,1
26	C	E/R SUPPLY FAN NO.1	14,0	20	0,9	15,5	0,9	1	1	0,90	14,0
27	C	E/R SUPPLY FAN NO.2	14,0	20	0,9	15,5	0,9	1	1	0,90	14,0
28	C	E/R SUPPLY FAN NO.3	14,0	20	0,9	15,5	0,9	1	1	0,90	14,0
29	C	E/R SUPPLY FAN NO.4	14,0	20	0,9	15,5	0,9	1	1	0,90	14,0
30	C	PURIFIER ROOM EXH.VENTILATOR	2,5	3	0,82	3,0	0,9	1	1	0,90	2,7
31	C	PUMP HFO SUPPLY UNIT NO.1	2,1	3	0,8	2,6	0,9	0,5	1	0,45	1,2
32	C	PUMP HFO SUPPLY UNIT NO.2	2,1	3	0,8	2,6	0,9	0,5	1	0,45	1,2
33	C	CIRC. PUMP FOR HFO SUPPLY UNIT NO.1	2,8	3,5	0,84	3,3	0,9	0,5	1	0,45	1,5
34	C	CIRC. PUMP FOR HFO SUPPLY UNIT NO.2	2,8	3,5	0,84	3,3	0,9	0,5	1	0,45	1,5
35	C	H.F.O. SEPARATOR NO.1	N.A.	N.A.	N.A.	6,5	0,9	0,5	0,9	0,41	2,6
36	C	H.F.O. SEPARATOR NO.2	N.A.	N.A.	N.A.	6,5	0,9	0,5	0,9	0,41	2,6
37	C	MAIN AIR COMPRESSER NO.1	N.A.	N.A.	N.A.	43,0	1	0,5	0,1	0,05	2,2
38	C	MAIN AIR COMPRESSER NO.2	N.A.	N.A.	N.A.	43,0	1	0,5	0,1	0,05	2,2
39	C	SERVICE AIR COMPRESSER	N.A.	N.A.	N.A.	22,0	1	1	0,1	0,10	2,2
40	C	VENT. AIR SUPPLY	N.A.	N.A.	N.A.	1,0	1	1	0,5	0,50	0,1
41	C	BILGE WATER SEPARATOR	N.A.	N.A.	N.A.	1,5	1	1	0,1	0,10	0,2
42	C	M/E L.O. SEPARATOR	N.A.	N.A.	N.A.	6,5	0,9	1	0,2	0,18	1,2
43	C	G/E L.O. SEPARATOR	N.A.	N.A.	N.A.	6,5	0,9	1	0,2	0,18	1,2
44	D	HYDROPHORE PUMP NO.1	2,8	4	0,84	3,3	1	0,5	0,1	0,05	0,2
45	D	HYDROPHORE PUMP NO.2	2,8	4	0,84	3,3	1	0,5	0,1	0,05	0,2

Id	Grou p	Description	Mech. Power "Pm"	El. Motor output	Efficie n. "e"	Rated el. Power "Pr"	load factor "kl"	duty factor "kd"	time factor "kt"	use factor "ku"	Necess a ry power "Pload"
46	D	HOT WATER CIRCULATING PUMP NO.1	0,5	1,0	0,8	0,8	1	0,5	0,2	0,10	0,1
47	D	HOT WATER CIRCULATING PUMP NO.2	0,5	1,0	0,8	0,8	1	0,5	0,2	0,10	0,1
48	E	E/R WORKSHOP WELDING SPACE EXH.	0,5	0,8	0,8	0,6	0,9	1	1	0,90	0,6
49	F	ECR COOLER UNIT	N.A.	N.A.	N.A.	4,2	1	1	0,5	0,50	2,1
50	F	FAN FOR AIR CONDITIONING PLANT	N.A.	N.A.	N.A.	8,0	0,9	1	0,5	0,45	3,6
51	F	COMP. AIR CONDITIONING PLANT NO.1	N.A.	N.A.	N.A.	10,0	0,9	1	0,5	0,45	4,5
52	F	COMP. AIR CONDITIONING PLANT NO.2	N.A.	N.A.	N.A.	10,0	0,9	1	0,5	0,45	4,5
53	F	COMP. AIR CONDITIONING PLANT NO.3	N.A.	N.A.	N.A.	10,0	0,9	1	0,5	0,45	4,5
54	F	COMP. AIR CONDITIONING PLANT NO.4	N.A.	N.A.	N.A.	10,0	0,9	1	0,5	0,45	4,5

Id	Group	Description	Mech. Power "Pm"	El. Motor output	Efficien. "e"	Rated el. Power "Pr"	load factor "kl"	duty factor "kd"	time factor "kt"	use factor "ku"	Necessary power "Pload"
55	G	FAN FOR GALLEY AIR COND. PLANT	N.A.	N.A.	N.A.	1,5	0,9	1	0,5	0,45	0,7
56	G	COMP. FOR GALLEY AIR COND. PLANT	N.A.	N.A.	N.A.	3,5	0,9	1	0,5	0,45	1,6
57	G	REF. COMPRESSOR NO.1	N.A.	N.A.	N.A.	4,0	1	0,5	0,1	0,05	0,2
58	G	REF. COMPRESSOR NO.2	N.A.	N.A.	N.A.	4,0	1	0,5	0,1	0,05	0,2
59	G	GALLEY EQUIPMENT	N.A.	N.A.	N.A.	80,0	0,5	1	0,1	0,05	4,0
60	H	VAC. COLLECTION SYSTEM	2,4	3,0	0,8	3,0	1	1	1	1,00	3,0
61	H	GALLEY EXH.	1,2	1,5	0,8	1,5	1	1	1	1,00	1,5
62	H	LAUNDRY EXH.	0,1	0,15	0,8	0,1	1	1	1	1,00	0,1
63	H	SEWAGE TREATMENT	N.A.	N.A.	N.A.	4,5	1	1	0,1	0,10	0,5
64	H	SEWAGE DISCHARGE	3	7,5	0,88	3,4	0,9	1	0,1	0,09	0,3
65	I	ACCOMMODATION LIGHTING	N.A.	N.A.	N.A.	16,0	1	1	0,5	0,5	8,0
66	I	E/R LIGHTING	N.A.	N.A.	N.A.	18,0	1	1	1	1,00	18,0
67	I	NAVIGATION LIGHTING	N.A.	N.A.	N.A.	0,9	1	0,5	1	0,50	0,4
68	I	BACK. NAV. LIGHTING	N.A.	N.A.	N.A.	0,9	1	0,5	1	0,50	0,4
								TOTAL POWER			**354,0**
P_{AE} = Total Power / (average efficiency of generators) = 354/0.93 = 381 kW											

6 Towing Tank test organization quality system

Towing tank tests will be performed in TEST corp.

The quality control system of the towing tank test organization TEST corp. has been documented previously (see report 100 for the ship hull No. 12345) and the quality manual and calibration records are available to the verifier.

The measuring equipment has not been modified since the issue of report 100 and is listed in table 6.1.

Table 6.1: List of measuring equipment

	Manufacturer	Model	Series	Lab. Id.	status
Propeller dynamometer	B&N	6001	300	125-2	Calibrated 01/01/2011
…					

7 Estimation process of power curves at design stage

7.1 Test procedure

The tests and their analysis are conducted by TEST corp. applying their standard correlation method (document is given in annex 1).

The method is based on thrust identity and references ITTC Recommended Procedure 7.5 - 02 - 03 -1.4 ITTC 1978 Trial Prediction Method (in its latest reviewed version of 2017), with prediction of the full scale rpm and delivered power by use of the C_P – C_N correction factors.

The results are based on a Resistance Test, a Propulsion Test and use the Open Water Characteristics of the model propeller used during the tests and the Propeller Open Water Characteristics of the final propeller given in 7.4.

Results of the resistance tests and propulsion tests of the ship model are given in the report of TEST corp. given in annex 2.

7.2 Speed prediction

The ship delivered power P_D and rate of revolutions n_S are determined from the following equations:

$$P_D = C_p \cdot P_{DS}$$

$$n_T = C_N \cdot n_S$$

Where C_N and C_P are experience-based factors and P_{DS} (resp. n_S) are the delivered power (resp. rpm) obtained from the analysis of the towing tank tests.

The ship total resistance coefficient C_{TS} is given by:

$$C_{TS} = \frac{S_S + S_{BK}}{S_S} \cdot [(1+k) \cdot C_{FS} + \Delta C_F] + C_R + C_{AAS} + C_{AppS}$$

Where:

S_S: ship hull wetted surface, here 9886 m^2 S_{BK}: wetted surface of bilge keels

k: form factor. Here 1+k = 1.38 over the speed range, determined according to ITTC standard procedure 7.5-02-02-01

C_{FS}: ship frictional resistance coefficient (computed according to ITTC 1957 formula)

ΔC_F: roughness allowance, computed according to Bowden-Davison formula. Here ΔC_F = 0.000339

C_R: residual resistance coefficient

C_{AAS}: air resistance coefficient

C_{AppS}: ship appendages (propeller boss cap fins) resistance coefficient, computed as provided in annex 2.

The air resistance coefficient is computed according to the following formula:

$$C_{AAS} = C_{DA} \cdot \frac{\rho_A \cdot A_{VS}}{\rho_S \cdot S_S}$$

Where:

C_{DA} is the air drag coefficient, here 0.8

ρ_A and ρ_S are the air density and water density, respectively

A_{VS} is the projected wind area, here 820 m^2

$C_{AAS} = 7.9.10^{-5}$

The delivered power P_D results of the towing tank tests are summarized in table 7.1 for the EEDI condition (scantling draft) and in table 7.2 for the sea trial condition (light ballast draft).

Table 7.1: results of trial prediction in EEDI condition

Model reference: SX100 - model scale: 40					
Loading condition: EEDI loading condition (12.70 m draft)					
Resistance test: R001		Propulsion test: P001		Model propeller: Prop01	
Ship speed V (knot)	Wake factor w_{TM}-w_{TS}	Propeller thrust T_S (kN)	Propeller torque Q_S (kNm)	rpm on ship n_S	Delivered Power P_D (kW)
12	0.098	522	467	78	3781
12.5	0.093	578	514	82	4362

13	0.089	638	563	86	5004
13.5	0.081	701	615	90	5710
14	0.079	768	669	93	6486
14.5	0.086	838	727	97	7333
15	0.091	912	786	101	8257
15.5	0.099	990	849	105	9261
Experience-based factor C_P: 1.01					
Experience based factor C_N: 1.02					

Table 7.2: results of trial prediction in sea trial condition

Model reference: SX100 - model scale: 40					
Loading condition: Sea trial condition (5.80 m draft)					
Resistance test: R002		Propulsion test: POO2		Model propeller: Prop01	
Ship speed V (knot)	Wake factor w_{TM}-w_{TS}	Propeller thrust T_S (kN)	Propeller torque Q_S (kNm)	rpm on ship n_S	Delivered Power P_D (kW)
12	0,079	406	379	72	2974
12,5	0,081	451	418	76	3445
13	0,083	500	459	79	3968
13,5	0,085	551	503	83	4545
14	0,087	606	549	87	5181
14,5	0,088	664	597	90	5878
15	0,091	725	648	94	6641
15,5	0,089	790	701	98	7474
Experience-based factor C_P: 1.05					
Experience based factor C_N: 1.03					

The predicted results are represented on the speed curves given in Figure 3.1. The EEDI condition results are indexed (Full, p), the sea trial condition results (Ballast, p).

7.3 Ship and propeller models

The ship model is at scale λ = 40. The characteristics are given in table 7.3.

Table 7.3: characteristics of the ship model

Identification (model number or similar)	SX 100
Material of construction	Wood
Principal dimensions	
Length between perpendiculars (L_{PP})	4.625 m
Length of waterline (L_{WL})	4.700 m
Breadth (B)	0.806 m
Draught (T)	0.317 m
Design displacement (Δ) (kg, fresh water)	1008.7 kg
Wetted surface area	6.25 m^2
Details of turbulence stimulation	Sand strips
Details of appendages	rudder
Tolerances of manufacture	+/- 2.5 mm on length +/- 1 mm on breadth

The propeller model used during the tests is a stock model with the following characteristics:

Table 7.4: characteristics of the stock propeller used during the tests

Identification (model number or similar)	Prop01
Materials of construction	aluminium
Blade number	4
Principal dimensions	
Diameter	147.5 mm
Pitch-Diameter Ratio (*P/D*)	0.68
Expanded blade Area Ratio (A_E/A_0)	0.60
Thickness Ratio (*t/D*)	0.036
Hub/Boss Diameter (d_h)	25 mm
Tolerances of manufacture	Diameter (D): ± 0.10 mm Thickness (t): ± 0.10 mm Blade width (c): ± 0.20 mm Mean pitch at each radius (P/D): ……..± 0.5% of design value.

7.4 Open water characteristics of propeller

The open water characteristics of the stock model propeller are given in annex 2. The open water characteristics of the ship propeller are given in Figure 7.1.

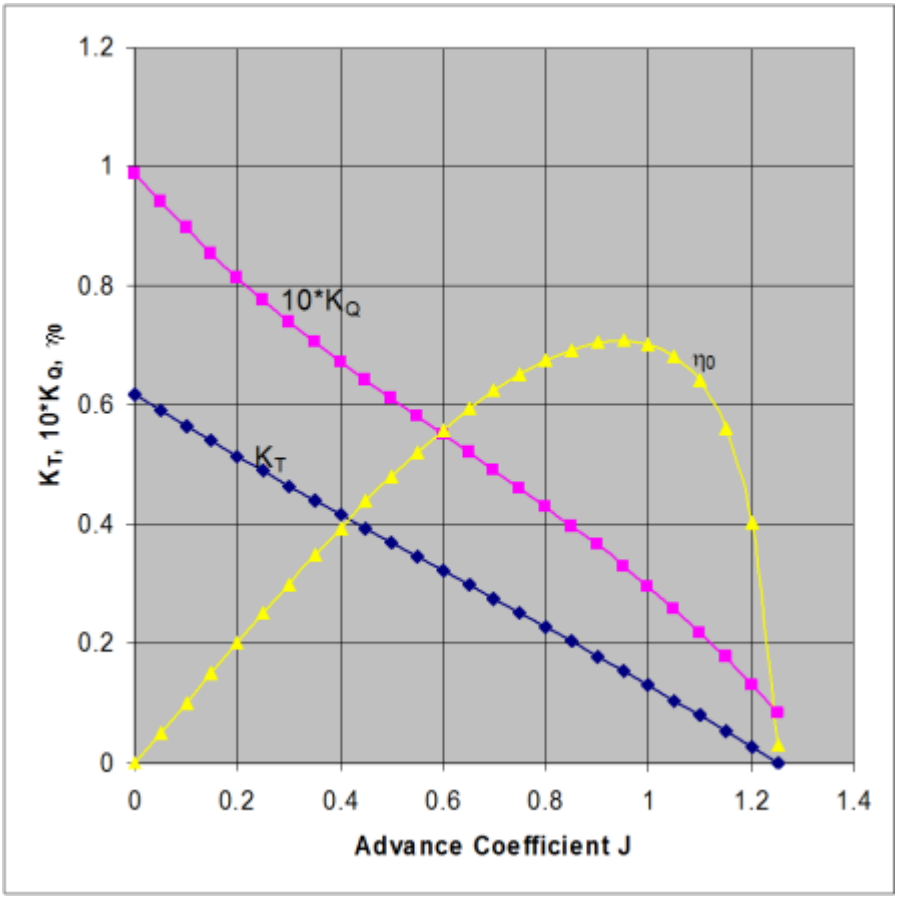

Figure 7.1: open water characteristics of ship propeller

8 Lines and offsets of the ship

The ships lines and offsets table are given in Annex 3.

9 Description of energy saving equipment

9.1 Energy saving equipment of which effects are expressed as $P_{AEeff(i)}$ and/or $P_{eff(i)}$ in the EEDI calculation formula

None here.

9.2 Other energy saving equipment

The propeller boss cap fins are described in annex 4.

10 Justification of SFC (documents attached to NO_x technical file of the parent engine)

10.1 Main engine

The shop test report for the parent main engine is provided in annex 5.1. The SFOC has been corrected to ISO conditions.

10.2 Auxiliary engine

The technical file of the EIAPP certificate of the auxiliary engines is provided in annex 5.2. The SFOC has been corrected to ISO conditions.

11 Calculation of attained EEDI at design stage

11.1 Input parameters and definitions

The EEDI quantities and intermediate calculations are listed in table 11.1:

Table 11.1: Parameters in attained EEDI calculation

EEDI quantity	Value	Remarks
C_{FME}	3.206	Marine Diesel oil is used for shop test of the main engine
P_{ME}	6900 kW	No shaft generator installed (P_{PTO} = 0) MCR is 9200 kW PME = 0.75x9200 = 6 900 kW
SFC_{ME}	171 g/kWh	According to parent engine shop test report in ISO conditions (see 10.1)
CF_{AE}	3.206	Marine diesel oil is used for shop test of the auxiliary engine
P_{PTI}	0	No shaft motor installed

P_{AE}	381 kW	MCR of the engine is 9200 kW, less than 10000kW $P_{AE} = 0.05 \cdot \left(\sum_{i=1}^{nME} MCR_{MEi} + \frac{\sum_{i=1}^{nPTI} P_{PTI(i)}}{0.75} \right)$ P_{AE} = 0.05*9200 = 460 kW According to electric power table included in table 5.1, ∑Pload(i) = 354 kW The weighted average efficiency of generators = 0.93 (KWelec/kWmech) P_{AE} = ∑Pload(i) / 0.93 = 381 kW The difference (460 – 381) KW is expected to vary EEDI by slightly

		more than 1%, so 381 kW is considered.
SFC_{AE} (at 75% MCR)	199 g/kWh	According to technical file of EIAPP certificate in ISO conditions (see 10.2). According to the IMO Calculation Guidelines, the SFC_{AE} at 75% MCR should be used when P_{AE} is estimated by the electric power table (EPT) for the reason that P_{AE} computed using the formula in the IMO Calculation Guidelines is significantly different from the total power used at normal seagoing
P_{eff}	0	No mechanical energy efficient devices The propeller boss cap fins act by reducing ship resistance
P_{AEeff}	0	No auxiliary power reduction
`f_{eff}		Not relevant here (see above)
f_j	1.0	The ship is a bulk carrier without ice notations. fj = 1.0
f_i	1.017	No ice notation f_{iICE} = 1.0 No voluntary structural enhancement for this ship f_{iVSE} = 1.0 The ship has the notation Bulk carrier CSR: f_{iCSR} = 1 + 0.08*LWT_{CSR} / DWT_{CSR} = 1+0.08*11590/55000 = 1.017 fi = f_{iICE} x f_{iVSE} x f_{iCSR} = 1.017
f_m	1.0	No ice notation
f_w	1.0	For attained EEDI calculation under regulation 22 and 24 of MARPOL Annex VI, f_w is 1.0
f_c	1.0	The ship is a bulk carrier not designed to carry light cargoes, f_c = 1.0
Capacity	55000	For a bulk carrier, Capacity is deadweight = 55 000 tons
V_{ref}	14.25 knots	At design stage, reference speed is obtained from the towing tank test report and delivered power in scantling draft (EEDI) condition is given in table 7.1 In table 7.1 P_D = 1.0 x P_{ME} = 6900 kW The reference speed is read on the speed curve corresponding to table 7.1 at intersection between curve *Full, p* and 6900 kW V_{ref} = 14.25 knots

11.2 Result

For this vessel, Attained EEDI is:

$$\frac{\left(\prod_{j=1}^{n} f_j\right)\left(\sum_{i=1}^{nME} P_{ME(i)} \cdot C_{FME(i)} \cdot SFC_{ME(i)}\right) + \left(P_{AE} \cdot C_{FAE} \cdot SFC_{AE}*\right) + \left(\left(\prod_{j=1}^{n} f_j \cdot \sum_{i=1}^{nPTI} P_{PTI(i)} - \sum_{i=1}^{neff} f_{eff(i)} \cdot P_{AEeff(i)}\right) C_{FAE} \cdot SFC_{AE}\right) - \left(\sum_{i=1}^{neff} f_{eff(i)} \cdot P_{eff(i)} \cdot C_{FME} \cdot SFC_{ME}**\right)}{f_i \cdot f_c \cdot f_i \cdot Capacity \cdot f_w \cdot V_{ref} \cdot f_m}$$

Attained EEDI = (6900*3.206*171+381*3.206*199) / (1.017*55000*14.25) = 5.05 g/t.nm

12 Required EEDI

According to MARPOL Annex VI, Chapter 4, Regulation 24, the required EEDI is: (1-x/100) x reference line value

The reference line value = $a*b^{-c}$ where a, b, c are given for a bulk carrier as:

a= 961.79 b = deadweight of the ship c = 0.477

So reference line value = 5.27 g/t.nm

In Phase 0 (between 1 Jan 2013 and 31 Dec 2014) above 20000 DWT, x = 0

So Required EEDI = 5.27 g/t.nm

Figure 12.1 provides the relative position of attained EEDI with reference to required value.

As a conclusion, for this vessel:

- attained EEDI = 5.05 g/t.nm
- required EEDI = 5.27 g/t.nm
- Regulation criteria is satisfied with 4.2% margin

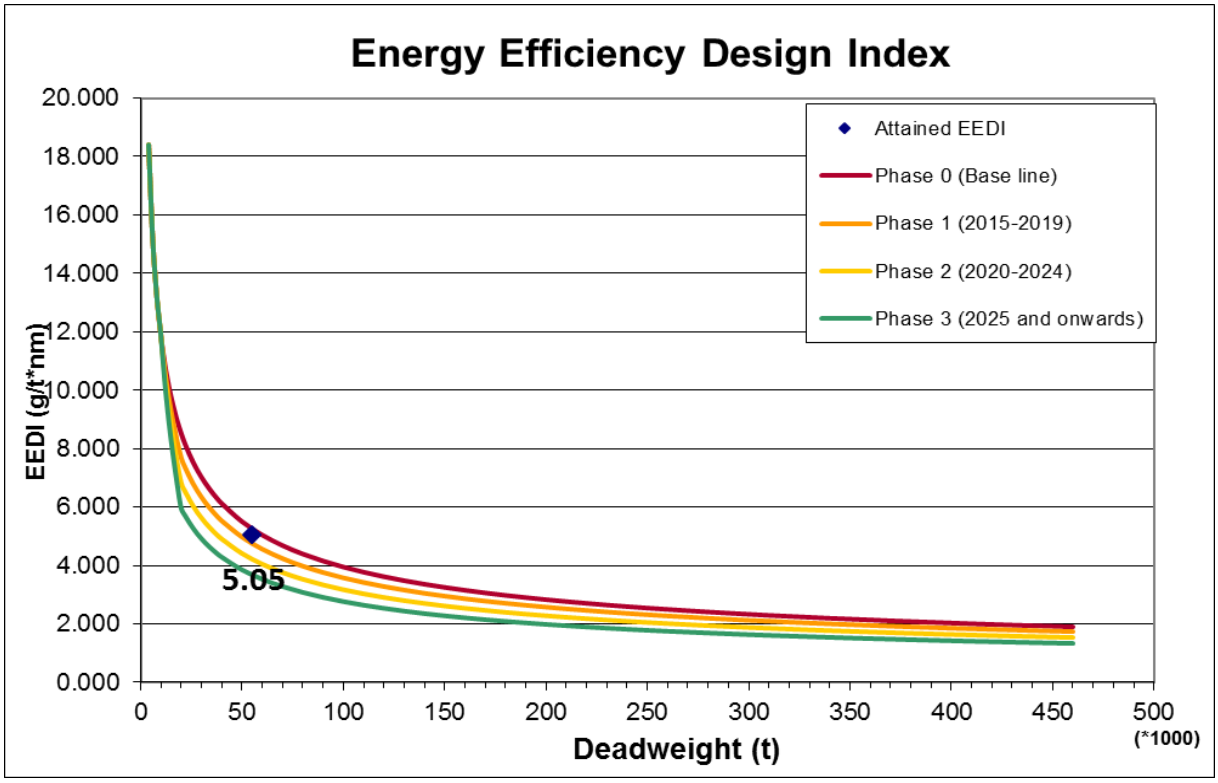

Figure 12.1: Required EEDI value

13 Calculation of attained $EEDI_{weather}$

Not calculated.

14 Lightweight check report

The lightweight check report is provided in annex 6. The final characteristics of the ship are:

Displacement	66171 tons
Lightweight	11621 tons
Deadweight	54550 DWT

15 Sea trial report with corrections

The sea trial report is provided in annex 7. The results of the sea trial follow the assessment guideline of ISO 15016:2015 are given on curve *Ballast,s* on Figure 3.1.

16 Calculation of attained EEDI at final stage

16.1 Recalculated values of parameters

The EEDI quantities and intermediate calculations are listed in table 16.1. Parameters which have not been modified from the preliminary verification stage are marked “no change”.

Table 16.1: Parameters in attained EEDI calculation (final stage)

EEDI quantity	Value	Remarks
C_{FME}	3.206	No change
P_{ME}	6900 kW	No change
SFC_{ME}	171 g/kWh	No change
CF_{AE}	3.206	No change
P_{PTI}	0	No change
P_{AE}	381 kW	The electric power table has been validated and endorsed (see the electric power table form in annex 8)
SFC_{AE} at 75% MCR	199 g/kWh	No change
P_{eff}	0	No change
P_{AEeff}	0	No change
f_{eff}		No change
f_j	1.0	No change
f_i	1.017	Deadweight and lightweight are computed from lightweight check: $f_{iCSR} = 1 + 0.08*LWT_{CSR} / DWT_{CSR} = 1+0.08*11621/54550 = 1.017$ $fi = f_{iICE} \times f_{iVSE} \times f_{iCSR} = 1.017$ (unchanged)
f_c	1.0	No change
f_m	1.0	No change
Capacity	54550 DWT	Deadweight has been computed from the lightweight check. See 14.
V_{ref}	14.65 knots	The reference speed in EEDI condition has been adjusted according to the delivered power adjustment methodology defined in Industry Guidelines. The reference speed is read on the speed curves diagram in Figure 3.1 V_{ref} = 14.65 knots

16.2 Final result

Attained EEDI = (6900*3.206*171+381*3.206*199) / (1.017*54550*14.65) = 4.95 g/t.nm

Required EEDI in Phase 0: $961.79*54550^{-0.477}$ = 5.29 g/t.nm

Regulation criteria is satisfied with 6.4% margin

List of annexes to the Document

Annex 1	Standard model-ship extrapolation and correlation method
Annex 2	Towing tank tests report
Annex 3	Ship lines and offsets table
Annex 4	Description of energy saving equipment
Annex 5	5.1 NO_x Technical File of main engine(s)
	5.2 NO_x Technical File of auxiliary engines
Annex 6	Lightweight check report
Annex 7	Sea trials report
Annex 8	EPT-EEDI form

APPENDIX 3
Verifying the calibration of model test equipment

Quality Control System

The existence of a Quality Control System is not sufficient to guarantee the correctness of the test procedures; QS, including ISO 9000, only give documentary evidence what is to be and has been done. Quality Control Systems do not evaluate the procedures as such.

The Test institute should have a quality control system (QS). If the QS is not certified ISO 9000 a documentation of the QS should be shown. A Calibration Procedure is given in ITTC Recommended Procedures 7.6-01-01.

1. Measuring Equipment

An important aspect of the efficient operation of Quality System according to measuring equipment is a full identification of devices used for the tests.

Measuring equipment instruments shall have their individual records in which the following data shall be placed:
- name of equipment
- manufacturer
- model
- series
- laboratory identification number (optionally)
- status (verified, calibration, indication)

Moreover the information about the date of last and next calibration or verification shall be placed on this record. All the data shall be signed by authorised officer.

2. Measuring Standards

Measuring standards used in laboratory for calibration purposes shall be confirmed (verified) by Weights and Measures Office at appropriate intervals (defined by the Weights and Measures Office).

All measuring standards used in laboratory for the confirmation purposes shall be supported by certificates, reports or data sheets for the equipment confirming the source, uncertainty and conditions under which the results were obtained.

3. Calibration

The calibration methods may differ from institution to institution, depending on the particular measurement equipment. The calibration shall comprise the whole measuring chain (gauge, amplifier, data acquisition system etc.).

The laboratory shall ensure that the calibration tests are carried out using certified measuring standards having a known valid relationship to international or nationally recognised standards.

a) Calibration Report

“Calibration reports” shall include:

- identification of certificate for measuring standards
- description of environmental conditions
- calibration factor or calibration curve
- uncertainty of measurement
- minimum and maximum capacity" for which the error of measuring instrument is within specified (acceptable) limits.

b) Intervals of Confirmation

The measuring equipment (including measuring standards) shall be confirmed at appropriate (usually periodical) intervals, established on the basis of their stability, purpose and wear. The intervals shall be such that confirmation is carried out again prior to any probable change in the equipment accuracy, which is important for the equipment reliability. Depending on the results of preceding calibrations, the confirmation period may be shortened, if necessary, to ensure the continuous accuracy of the measuring equipment.

The laboratory shall have specific objective criteria for decisions concerning the choice of intervals of confirmation.

c) Non - Conforming Equipment

Any item of measuring equipment

- that has suffered damage,
- that has been overloaded or mishandled,
- that shows any malfunction,
- whose proper functioning is subject to doubt,
- that has exceeded its designated confirmation interval, or
- the integrity of whose seal has been violated, shall be removed from service by segregation, clear labelling or cancelling.

Such equipment shall not be returned to service until the reasons for its nonconformity have been eliminated and it is confirmed again.

If the results of calibration prior to any adjustment or repair were such as to indicate a risk of significant errors in any of the measurements made with the equipment before the calibration, the laboratory shall take the necessary corrective action.

4. Instrumentation

Especially the documentation on the calibration of the following Instrumentation should be shown.

a) Carriage Speed

The carriage speed is to be calibrated as a distance against time. Period between the calibrations is to be in accordance with the internal procedure of the towing tank test organisation.

b) Water Temperature

Measured by calibrated thermometer with certificate (accuracy 0.1°C).

c) Trim Measurement

Calibrated against a length standard. Period between the calibrations is to be in accordance with the internal procedure of the towing tank test organisation.

d) Resistance Test

Resistance Test is a force measurement. It is to be calibrated against a standard weight. Calibration normally before each test series.

e) Propulsion Test

During Self Propulsion Test torque, thrust and rate of revolutions are measured. Thrust and Torque are calibrated against a standard weight. Rate of revolution is normally measured by a pulse tachometer and an electronic counter which can be calibrated e.g. by an oscillograph.

Period between the calibrations is to be in accordance with the internal procedure of the towing tank test organisation.

f) Propeller Open Water Test

During Propeller Open Water Test torque, thrust and rate of revolutions are measured. Thrust and Torque are calibrated against a standard weight. Rate of revolution is normally measured by a pulse tachometer and an electronic counter which can be calibrated e.g. by an oscillograph.

Period between the calibrations is to be in accordance with the internal procedure of the towing tank test organisation.

Examples of documentation sheets are given in the Annexes 1 and 2:

ANNEX 1: SAMPLE OF MEASURING EQUIPMENT CARD

QM 4.10.5.1	Measurement Equipment Card	Laboratory Identification Number
Equipment	Manufacturer Serial No. Basic range	Model Date of Purchase
Work Instructions Calibration Instructions Verified at		**Status** Calibrated Indication Verified

Date of Check	Certificate. No.	Period	Date of Next Check	Responsible	Department	Approval

ANNEX 2: SAMPLE OF CALIBRATION CERTIFICATE.

QM 4.10.6.2

CALIBRATION CERTIFICATE for PROPELLER

NO.

LIN

Calibration Instructions		Calibrated by :	
Date of calibration		Checked by :	

Measurement combination

DYNAMOMETER LIN	Manufacturer		Model	
	Serial No		Date of purchased	
	Work instruction		Last calibration	
Cable				
AMPLIFIER LIN	Manufacturer		[illegible]	
	Serial No		[illegible]chased	
	Work instruction		[illegible]sducer	
	Excitation		Frequency of excit.	
Thrust :	Amp. gain		Zero not load	
Torque :	Amp. gain		Zero not load	
Cable				
A/C TRANSDUCER LIN	Manufacturer		Model	
	Serial No		Date of purchased	
	Work instruction		Certificate No	
MEASUREMENT STANDARDS	Mass		Certificate No	
	Length arm of force		Certificate No	
	Voltmeter		Certificate No	

QM 4.10.6.2	CALIBRATION RESULTS		
Environmental condition			
Place of test :			
Temperature :	initial	final	
Dampness :	initial	final	
Computation results of calibrations test			
Executed program	procedure	certificate NO.	
	Thrust	**Torque**	
Drift :			
Non Linearity errors :			
Hysteresis :			
Precision errors :			
Total uncertainty :			
Calibration factor :			
Calibration requests:			
Specified limits of	**Thrust**	**Torque**	
errors :			
Maximum capacity :			
Minimum capacity :			
Note : tests and computations results are included in report			

Prepared by : ..... Approved by : ..... Date : .....

APPENDIX 4
Review and witnessing of model test procedures

The Model Tests are to be witnessed by the verifier. Special attention is to be given to the following items:

1. Ship Model

Hydrodynamic Criteria

a) *Model Size*: The model should generally be as large as possible for the size of the towing tank taking into consideration wall, blockage and finite depth effects, as well as model mass and the maximum speed of the towing carriage (ITTC Recommended Procedure 7.5-02-02-01 Resistance Test).

b) *Reynolds Number*: The Reynolds Number is to be, if possible, above 2.5×10^5.

c) *Turbulence Stimulator*: In order to ensure turbulent flow, turbulence stimulators have to be applied.

Manufacture Accuracy

With regard to accuracy the ship model is to comply with the criteria given in ITTC Recommended Procedure 7.5-01-01-01, Ship Models.

The following points are to be checked:

a) *Main dimensions*: L_{PP}, B.

b) *Surface finish*: Model is to be smooth. Particular care is to be taken when finishing the model to ensure that geometric features such as knuckles, spray rails, and boundaries of transom sterns remain well-defined.

c) *Stations and Waterlines*: The spacing and numbering of displacement stations and waterlines are to be properly defined and accurately marked on the model.

d) *Displacement*: The model is to be run at the correct calculated displacement. The model weight is to be correct to within 0.2% of the correct calculated weight displacement. In case the marked draught is not met when the calculated displacement has been established the calculation of the displacement and the geometry of the model compared to the ship has to be revised. (Checking the Offsets).

Documentation in the report

Identification (model number or similar)
Materials of construction
Principal dimensions
Length between perpendiculars (L_{PP})
Length of waterline (L_{WL})
Breadth (B)
Draught (T)
For multihull vessels, longitudinal and transverse hull spacing
Design displacement (Δ) (kg, fresh water)

Hydrostatics, including water plane area and wetted surface area
Details of turbulence stimulation
Details of appendages
Tolerances of manufacture

2. Propeller Model

The Manufacturing Tolerances of Propellers for Propulsion Tests are given IN ITTC Recommended Procedures 7.5-01-01-01, Ship Models Chapter 3.1.2. Attention: Procedure 7.5 – 01-02-02 Propeller Model Accuracy is asking for higher standards which are applicable for cavitation tests and not required for self-propulsion tests.

Propeller Model Accuracy

Stock Propellers
During the "stock-propeller" testing phase, the geometrical particulars of the final design propeller are normally not known. Therefore, the stock propeller pitch (in case of CPP) is recommended to be adjusted to the anticipated propeller shaft power and design propeller revolutions. (ITTC Recommended Procedure 7.5-02-03-01.1 Propulsion/Bollard Pull Test).

Adjustable Pitch Propellers
Before the Tests the pitch adjustment is to be controlled.

Final Propellers
Propellers having diameter (D) typically from 150 mm to 300 mm is to be finished to the following tolerances:
Diameter (D) ± 0.10 mm
Thickness (t) ± 0.10 mm
Blade width (c) ± 0.20 mm
Mean pitch at each radius (P/D): ± 0.5% of de-sign value.
Special attention is to be paid to the shaping accuracy near the leading and trailing edges of the blade section and to the thickness distributions. The propeller will normally be completed to a polished finish.

Documentation in the report
Identification (model number or similar)
Materials of construction
Principal dimensions Diameter
Pitch-Diameter Ratio (*P/D*)
Expanded blade Area Ratio (A_E/A_0)
Thickness Ratio (*t/D*)
Hub/Boss Diameter (d_h)
Tolerances of manufacture

3. Model Tests

a) Resistance Test

The Resistance Test is to be performed acc. to ITTC Recommended Procedure 7.5-02-02-01 Resistance Test.

Documentation in the report

Model Hull Specification:

- Identification (model number or similar)
- Loading condition
- Turbulence stimulation method
- Model scale
- Main dimensions and hydrostatics (see ITTC Recommended Procedure 7.5-01-01-01 Ship Models and chapter 2 of this paper).

Particulars of the towing tank, including length, breadth and water depth
Test date
Parametric data for the test:

- Water temperature
- Water density
- Kinematic viscosity of the water
- Form factor (even if (1+k) =1.0 is applicable, this is to be stated)
- ΔC_F or C_A

For each speed, the following measured and extrapolated data is to be given as a minimum:

- Model speed
- Resistance of the model
- Sinkage fore and aft, or sinkage and trim

b) Propulsion Test

The Propulsion Test is to be performed acc. to ITTC Recommended Procedure 7.5-02-03-01.1 Propulsion Test/Bollard Pull.

Documentation in the report
Model Hull Specification:

- Identification (model number or similar)
- Loading condition
- Turbulence stimulation method
- Model scale
- Main dimensions and hydrostatics (see ITTC Recommended Procedure 7.5-01-01-01 Ship Models and chapter 2 of this paper).

Model Propeller Specification:

- Identification (model number or similar)
- Model Scale
- Main dimensions and particulars (see ITTC Recommended Procedure 7.5-01-01-01 Ship Models and chapter 3 of this paper)

Particulars of the towing tank, including length, breadth and water depth
Test date
Parametric data for the test:

- Water temperature
- Water density
- Kinematic viscosity of the water
- Form factor (even if (1+k) = 1.0 is applicable, this is to be stated)
- ΔC_F or C_A
- Appendage drag scale effect correction factor (even if a factor for scale effect correction is not applied, this is to be stated).

For each speed the following measured data and extrapolated data is to be given as a minimum:

- Model speed
- External tow force
- Propeller thrust,
- Propeller torque

- Rate of revolutions.
- Sinkage fore and aft, or sinkage and trim
- The extrapolated values are also to contain the resulting delivered power P_D.

c) Propeller Open Water Test

In many cases the Propeller Open Water Characteristics of a stock propeller will be available and the Propeller Open Water Test need not be repeated for the particular project. A documentation of the Open Water Characteristics (Open Water Diagram) will suffice.

In case of a final propeller or where the Propeller Open Water Characteristics is not available the Propeller Open Water Test is to be performed acc. to ITTC Recommended Procedure 7.5-02-03-02.1 Open Water Test.

Documentation in the report
Model Propeller Specification:

- Identification (model number or similar)
- Model scale
- Main dimensions and particulars (see recommendations of ITTC Recommended Procedure 7.5-01-01-01 Ship Models and chapter 3 of this paper)
- Immersion of centreline of propeller shaft in the case of towing tank

Particulars of the towing tank or cavitation tunnel, including length, breadth and water depth or test section length, breadth and height.
Test date
Parametric data for the test:

- Water temperature
- Water density
- Kinematic viscosity of the water
- Reynolds Number (based on propeller blade chord at 0.7*R*)

For each speed the following data is to be given as a minimum:

- Speed
- Thrust of the propeller
- Torque of the propeller
- Rate of revolution
- Force of nozzle in the direction of the propeller shaft (in case of ducted propeller)

Propeller Open Water Diagram

4. Speed Trial Prediction

The principal steps of the Speed Trial Prediction Calculation are given in ITTC Recommended Procedure 7.5 - 02 - 03 -1.4 ITTC 1978 Trial Prediction Method (in its latest reviewed version of 2017). The main issue of a speed trial prediction is to get the loading of the propeller correct and also to assume the correct full scale wake. The right loading of the propeller can be achieved by increasing the friction deduction by the added resistance (e.g. wind resistance etc.) and run the self-propulsion test already at the right load or it can be achieved by calculation as given in Procedure 7.5-02-03-1.4.

A wake correction is always necessary for single screw ships. For twin screw ships it can be neglected unless the stern shape is of twin hull type or other special shape.

The following scheme indicates the main components of a speed trial prediction. It is to be based on a Resistance Test, a Propulsion Test and an Open Water Characteristics of the used model propeller during the tests and the Propeller Open Water Characteristics of the final propeller.

Documentation

Model Hull Specification:

- Identification (model number or similar)
- Loading condition
- Turbulence stimulation method
- Model scale
- Main dimensions and hydrostatics (see ITTC Recommended Procedure 7.5-01-01- 01 Ship Models and chapter 2 of this paper).

Model Propeller Specification:

- Main dimensions and particulars (see ITTC Recommended Procedure 7.5-01-01-01 Ship Models and chapter 3 of this paper)

Particulars of the towing tank, including length, breadth and water depth
Resistance Test Identification (Test No. or similar)
Propulsion Test Identification (Test No. or similar)
Open Water Characteristics of the model propeller
Open Water Characteristics of ship propeller
Ship Specification:

- Projected wind area
- Wind resistance coefficient
- Assumed BF
- C_P and C_n

Principle Scheme for Speed Trial Prediction

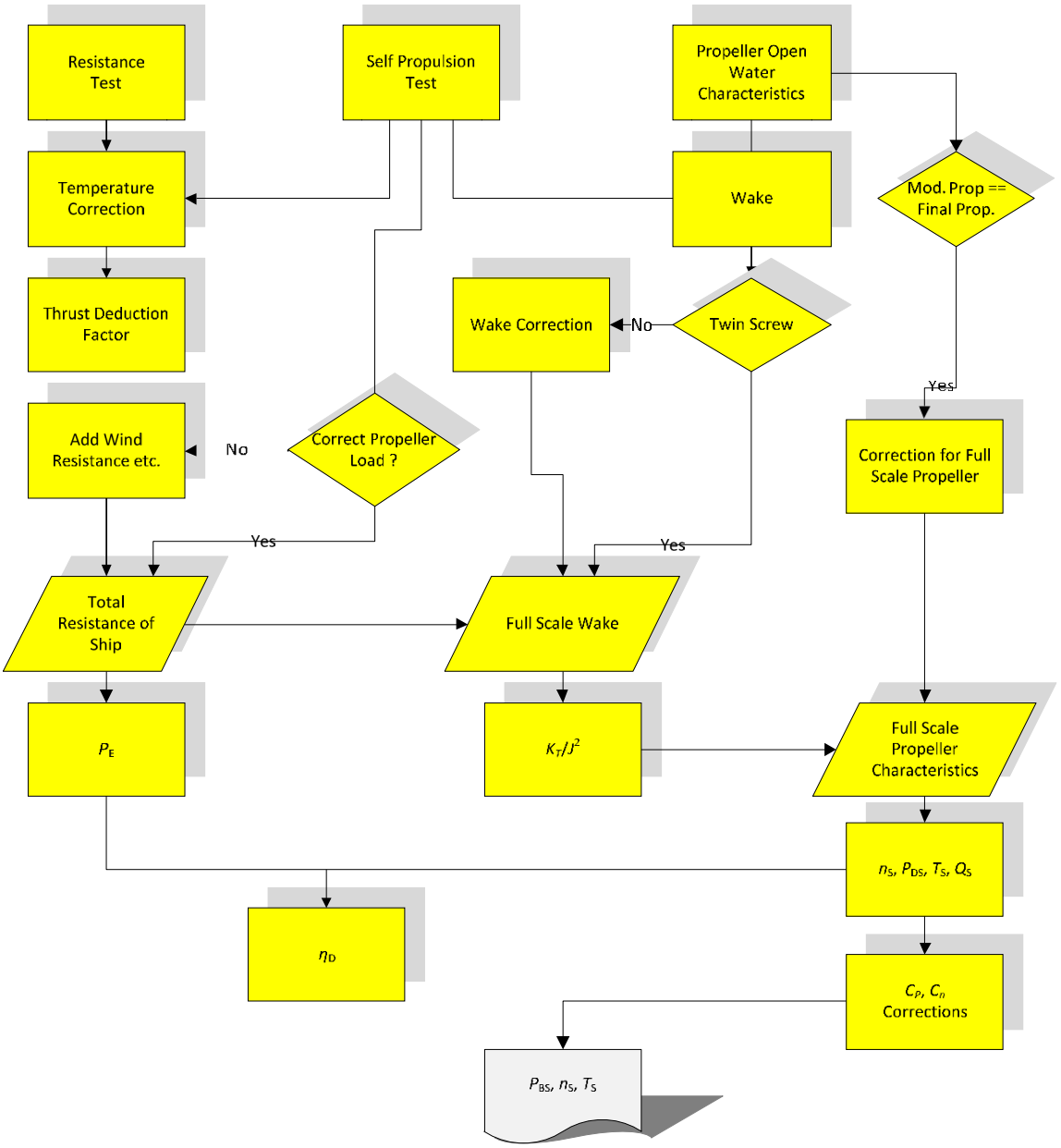

For each speed the following calculated data is to be given as a minimum:

- Ship speed
- Model wake coefficient
- Ship wake coefficient
- Propeller thrust on ship
- Propeller torque on ship
- Rate of revolutions on ship
- Predicted power on ship (delivered power on Propeller(s) P_D)
- Sinkage fore and aft, or sinkage and trim

Scheme for review and witnessing Model Tests

Checking of Model Testing Procedure

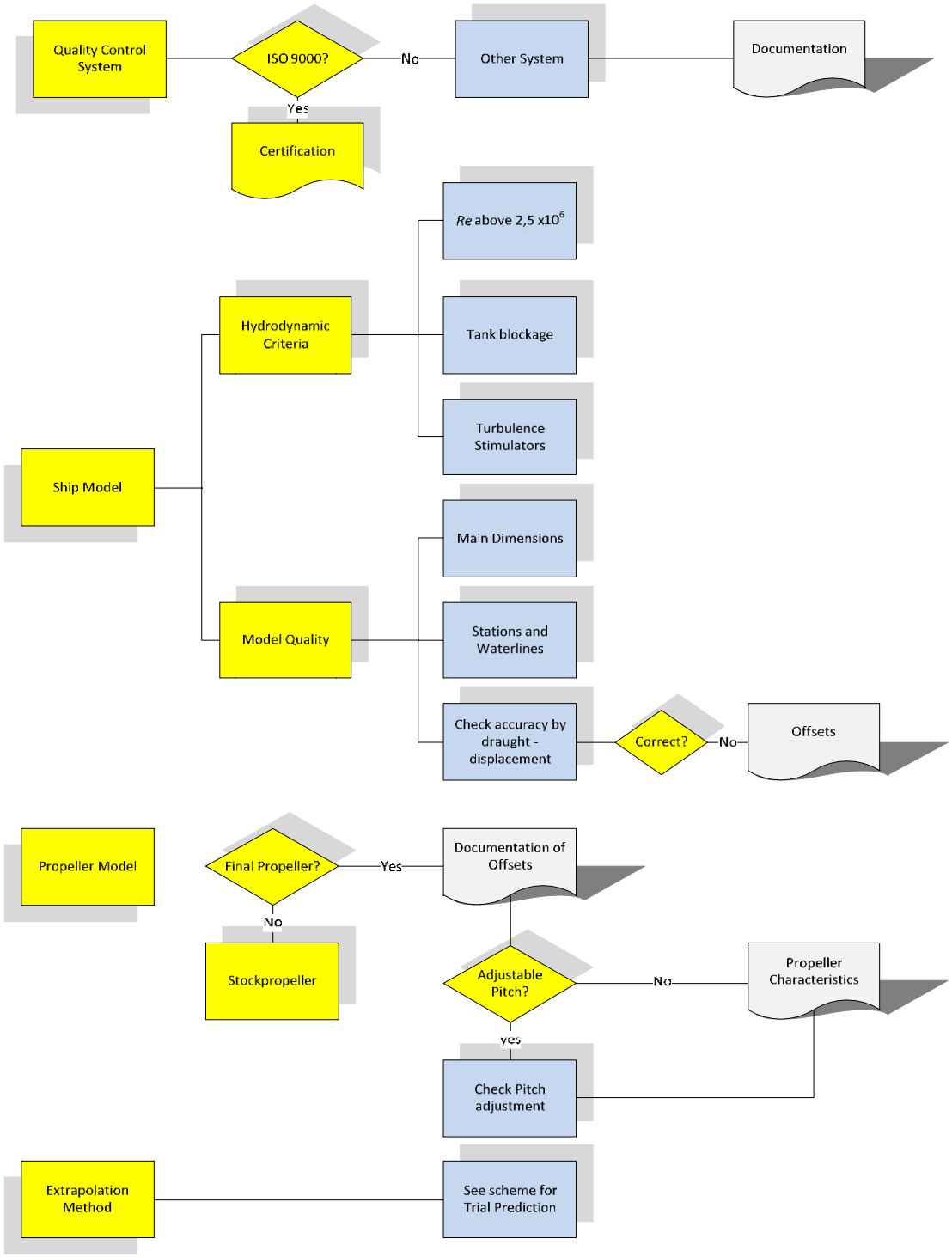

APPENDIX 5
Sample report "Preliminary Verification of EEDI"

ATTESTATION
PRELIMINARY VERIFICATION OF ENERGY EFFICIENCY DESIGN INDEX (EEDI) by *VERIFIER*

Statement N° EEDI/YYYY/XXX

Ship particulars:

Ship Owner: _____

Shipyard: _____

Ship's Name: _____

IMO Number: _____

Hull number: _____

Building contract date: _____

Type of ship: _____

Port of registry: _____

Deadweight: _____

Summary results of EEDI

Reference speed	VV.V knots
Attained EEDI	X.XX g/t.nm
Required EEDI	Y.YY g/t.nm

Supporting documents

Title	**ID and/or remarks**
EEDI Technical File	RRRR dated DD/MM/YYYY

This is to certify:

1 That the attained EEDI of the ship has been calculated according to the *2022 Guidelines on the method of calculation of the attained Energy Efficiency Design Index (EEDI) for new ships*, IMO resolution MEPC.364(79) as amended.

2 That the preliminary verification of the EEDI shows that the ship complies with the applicable requirements in regulation 22 and regulation 24 of MARPOL Annex VI as amended.

Completion date of preliminary verification of EEDI: xx/xx/xxxx

Issued at:_____on: _____

Signature of the Verifier

APPENDIX 6
Sample calculations of EEDI

Content

Appendix 6.1: Cruise passenger ship with diesel-electric propulsion

Appendix 6.2: LNG carrier with diesel-electric propulsion

Appendix 6.3: Diesel-driven LNG carrier with re-liquefaction system

Appendix 6.4: LNG carrier with steam turbine propulsion

Appendix 6.1
Sample calculation for diesel-electric cruise passenger ship

1. Preliminary calculation of attained EEDI at design stage

Attained EEDI for cruise passenger ship having diesel electric propulsion system is calculated as follows at design stage.
For a diesel-electric cruise passenger ship:
$P_{ME} = 0$, $P_{PTI} \neq 0$, $P_{PTO} = 0$

1) Input

The table below lists the input information needed at the design stage and verified at the final stage:

Symbol	Name	Value	Source
MPP	Rated output of electric propulsion motors	2 x 20000 kW	From EEDI technical file
η_{PTI}	Efficiency of transformer + converter + propulsion motor at 75% of rated motor output	0.945	From electric power table
η_{GEN}	Power-weighted average efficiency of generators	0.974	Calculation from individual generator efficiencies given in electric power table: 0.975*19000+0.972*14000/(14000+19000)
$HLOAD_{Max}$	Consumed electric power excluding propulsion in cruise most demanding conditions	15 779 kW	From electric power table for the most demanding cruise contractual conditions (here extreme summer conditions 28°C during 80% of the time)
SFC_{AE}	Power-weighted average of specific oil consumption among all engines at 75% of the MCR power	185 g/kWh	From NOx technical file
GT	Gross Tonnage	160000 ums	From EEDI technical file

MCR of auxiliary diesel engines 19,000 kW x 2 + 14,000 kW x 2
MPP 20,000 kW x 2
SFC_{AE} recorded in the test report annexed to the NOx technical file at 75% of MCR power and corrected to the ISO standard reference conditions.
185 g/kWh for both types of engines (19,000 kW and 14,000 kW)

2) Calculation of ΣP_{PTI}

The input is the rated output of the electric propulsion motors, MPP, which can be identified with the quantity noted $P_{PTI,Shaft}$ in 2.2.5.3 of the "2022 guidelines on the method of calculation of the attained energy efficiency design index (EEDI) for new ships".
The term P_{PTI} is then computed as follows:

$$\sum P_{PTI(i)} = \frac{\sum(0.75 \times MPP(i))}{\eta_{PTI} \times \eta_{Gen}}$$
$$\sum P_{PTI(i)} = \frac{2 \times 0.75 \times 20{,}000}{0.945 \times 0.974}$$
$$\sum P_{PTI(i)} = 32{,}593kW$$

Where η_{PTI} is the chain efficiency of the transformer, frequency converter and electric motor, as given by the manufacturer at 75% of the rated motor output and η_{Gen} is the weighted average efficiency of the generators.

3) Value of P_{AE}

P_{AE} is estimated by the consumed electric power, excluding propulsion, in most demanding (i.e. maximum electricity consumption) cruise conditions as given in the electric power table provided by the submitter, divided by the average efficiency of the generators.

The most demanding conditions maximise the design electrical load and correspond to contractual ambient conditions leading to the maximum consumption off heating ventilation and air conditioning systems, in accordance with Note 3 of the “2022 guidelines on the method of calculation of the attained energy efficiency design index (EEDI) for new ships”.

In this example, the most demanding condition corresponds to extreme summer conditions, where the external air temperature is 28°C during 80% of the time.

$$P_{AE} = \frac{HLOAD_{MaX}}{\eta_{Gen}} = \frac{15{,}779kW}{0.974} = 16{,}200kW$$

4) V_{ref} at EEDI condition

V_{ref} is obtained by the preliminary speed-power curves as the model tank test results at EEDI condition at design stage. Suppose that V_{ref} of 22.5 kn is obtained at 75% of *MPP*, in this example calculation at design stage.

5) Calculation of the attained EEDI at design stage

EEDI is calculated in accordance with paragraph 2 of the “2022 guidelines on the method of calculation of the attained energy efficiency design index (EEDI) for new ships”. The primary fuel is marine Gas Oil in this example.

$$EEDI = \frac{(P_{AE} + \sum_i P_{PTI}(i)) \cdot (C_{FAE} \cdot SFC_{AE})}{Capacity \cdot V_{ref}} = \frac{(16200 + 32593) \times 185 \times 3.206}{160{,}000(\text{UMS}) \times 22.5(\text{kn})} = 8.04$$

2. Final calculation of attained EEDI at sea trial

Attained EEDI at sea trial of cruise passenger ship having diesel electric propulsion system is calculated as follows.

1) Typical configuration and example of measurement points at sea trial

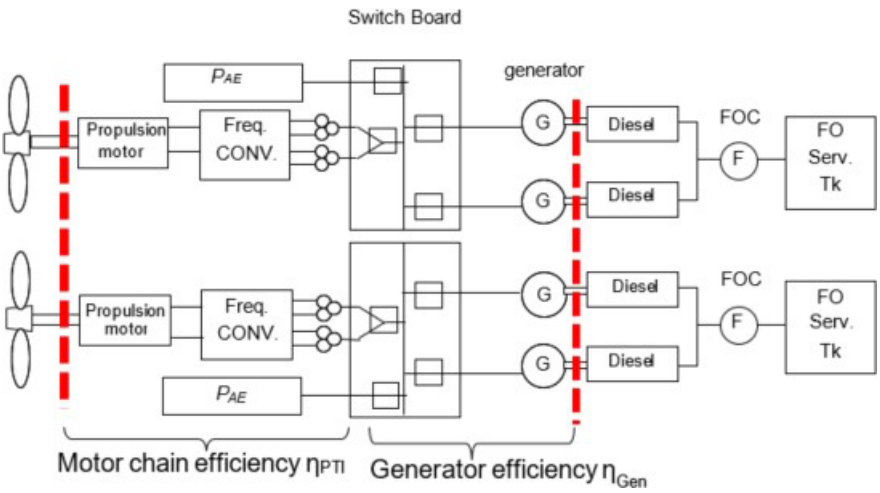

2) Specifications

Chain efficiency of the electric motor η_{PTI} and generator efficiency η_{Gen} can be confirmed during the sea trials at EEDI conditions (i.e. 75% of the rated motor output) taking into account the power factor cosφ of the electric consumers.

SFC_{AE} is computed form the NOx technical file if this file was not available at the preliminary stage.

Gross tonnage is confirmed at 160,000 ums.

Prior to sea trials, an on-board survey is performed to ensure that data read on the nameplates of the main electrical pieces of equipment comply with those recorded in the submitted electric power table.

3) V_{ref} at EEDI condition

V_{ref} is obtained by the speed-power curves as a result of the sea trial in accordance with the paragraph 4.3.9 of "2022 guidelines on survey and certification of the energy efficiency design index (EEDI)" as amended. Suppose that V_{ref} of 18.7kn is obtained at 75% of *MPP*, in this example calculation at sea trial.

During the sea trials, the shaft power transferred to the propellers $P_{PTI,Shaft}$ must be obtained. It could be measured by a torsiometer fitted on the propeller shaft, or obtained from the computation of the power consumption of the motor P_{SM} through the following relation:

$$P_{PTI,Shaft} = P_{SM} \times \eta_{PTI}$$

4) Calculation of the attained EEDI at sea trial

EEDI is calculated in accordance with paragraph 2 of the "2022 guidelines on the method of calculation of the attained energy efficiency design index (EEDI) for new ships". The primary fuel is marine Gas Oil in this example.

$$EEDI = \frac{(P_{AE} + \sum_i P_{PTI}(i)) \cdot (C_{FAE} \cdot SFC_{AE})}{Capacity \cdot V_{ref}}$$

$$= \frac{(16200 + 32593) \times 185 \times 3.206}{160{,}000(\mathrm{UMS}) \times 22.7(\mathrm{kn})} = 7.97$$

Appendix 6.2
Sample calculation for LNG carrier having diesel electric propulsion system

1. Preliminary calculation of attained EEDI at design stage

Attained EEDI for LNG carrier having diesel electric propulsion system at design stage is calculated as follows.

1) Specifications

MCR of main engines	10,000 (kW) x 3 + 6,400 (kW) x 1
MPP_{Motor}	24,000 (kW)
$SFC_{ME(i)_electric,\ gas\ mode\ at\ 75\%\ of\ MCR}$	162.0 (g/kWh) (for 10,000 (kW)-Engines) (SFC with the addition of the guarantee tolerance) 162.6 (g/kWh) (for 6,400 (kW)-Engine) (Ditto)
$SFC_{ME(i)_Pilotfuel}$	6.0 (g/kWh) (for 10,000 (kW)-Engines), 6.1 (g/kWh) (for 6,400 (kW)-Engine)
Deadweight	75,000 (ton)

2) $\eta_{electrical}$ at design stage

$\eta_{electrical}$ is set as 0.913 in accordance with paragraph 2.2.5.1 of the "2022 guidelines on the method of calculation of the attained energy efficiency design index (EEDI) for new ships".

3) Calculation of P_{ME}

P_{ME} is calculated in accordance with paragraph 2.2.5.1 of the "2022 guidelines on the method of calculation of the attained energy efficiency design index (EEDI) for new ships".

$$P_{ME} = 0.83 \times \frac{MPP_{Motor}}{\eta_{electrical}}$$

$$= 0.83 \times \frac{24{,}000}{0.913} = 21{,}818(kW)$$

4) Calculation of P_{AE}

P_{AE} is calculated in accordance with paragraph 2.2.5.6.1 and 2.2.5.6.3 of the "2022 guidelines on the method of calculation of the attained energy efficiency design index (EEDI) for new ships".

$$P_{AE} = \left(0.025 \times \sum_{i=1}^{nME} MCR_{ME(i)} + \sum_{i=1}^{nPTI} P_{PTI(i)} \Big/ 0.75\right) + 250 \qquad and/or\ ,$$

$$+CargoTankCapacity_{LNG} \times BOR \times COP_{reliquefy} \times R_{reliquefy} \quad (1)\ and/or, (Not\ Applicable)$$

$$+0.33 \sum_{i=1}^{nME} SFC_{ME(i),gasmode} \times \frac{P_{ME(i)}}{1000} \qquad (2)\ and/or\ , (Not\ Applicable)$$

$$= 0.02 \times \sum_{i=1}^{nME} PME_{(i)} \qquad (3)$$

$$= \{(0.025 \times 24{,}000) + 250\} + 0 + 0 + (0.02 \times 21{,}818)$$

$$= 1{,}286(kW)$$

Note:
*1: The value of MPP_{Motor} is used instead of MCR_{ME} in accordance with paragraph 2.2.5.6.3.3.

5) V_{ref} at EEDI condition

V_{ref} is obtained by the preliminary speed-power curves as the model tank test results at EEDI condition at design stage. Suppose that V_{ref} of 18.4kn is obtained at 83% of MPP_{Motor}, in this example calculation at design stage.

6) Calculation of the attained EEDI at design stage

EEDI is calculated in accordance with paragraph 2 of the "2022 guidelines on the method of calculation of the attained energy efficiency design index (EEDI) for new ships". The primary fuel is LNG in this example calculation. In this case, $SFC_{AE(i)_electric,\ gas\ mode\ at\ 75\%\ of\ MCR}$ is equalto $SFC_{ME(i)_electric,\ gas\ mode\ at\ 75\%\ of\ MCR}$, and $SFC_{AE(i)_Pilotfuel}$ is equal to $SFC_{ME(i)_Pilotfuel}$.

$$EEDI = \frac{P_{ME}\cdot\left(C_{FME_Gas}\cdot SFC_{ME_Gas} + C_{FME_Pilotfuel}\cdot SFC_{ME_Pilotfuel}\right) + P_{AE}\cdot\left(C_{FAE_Gas}\cdot SFC_{AE_Gas} + C_{FAE_Pilotfuel}\cdot SFC_{AE_Pilotfuel}\right)}{Capacity\cdot V_{ref}}$$

$$= \frac{21{,}818\times(2.750\times162.1+3.206\times6.0)+1{,}286\times(2.750\times162.1+3.206\times6.0)}{75{,}000(\mathrm{DWT})\times18.4(\mathrm{kn})} = 7.79$$

Note:
*1: The average weighed value of $SFC_{ME(i)_electric,\ gas\ mode\ at\ 75\%\ of\ MCR}$ and $SFC_{AE(i)_electric,\ gas\ mode\ at\ 75\%\ of\ MCR}$ is used;

$$\frac{162.0\times10{,}000(\mathrm{kW})\times3+162.6\times6{,}400(\mathrm{kW})}{10{,}000(\mathrm{kW})\times3+6{,}400(\mathrm{kW})} = 162.1(\mathrm{g/kWh})$$

*2: The average weighed value of $SFC_{ME(i)_Pilotfuel}$ and $SFC_{AE(i)_Pilotfuel}$ is used;.

$$\frac{6.0\times10{,}000(\mathrm{kW})\times3+6.1\times6{,}400(\mathrm{kW})}{10{,}000(\mathrm{kW})\times3+6{,}400(\mathrm{kW})} = 6.0(\mathrm{g/kWh})$$

2. Final calculation of attained EEDI at sea trial

Attained EEDI for LNG carrier having diesel electric propulsion system at sea trial is calculated as follows.

1) Typical configuration and example of measurement points at sea trial

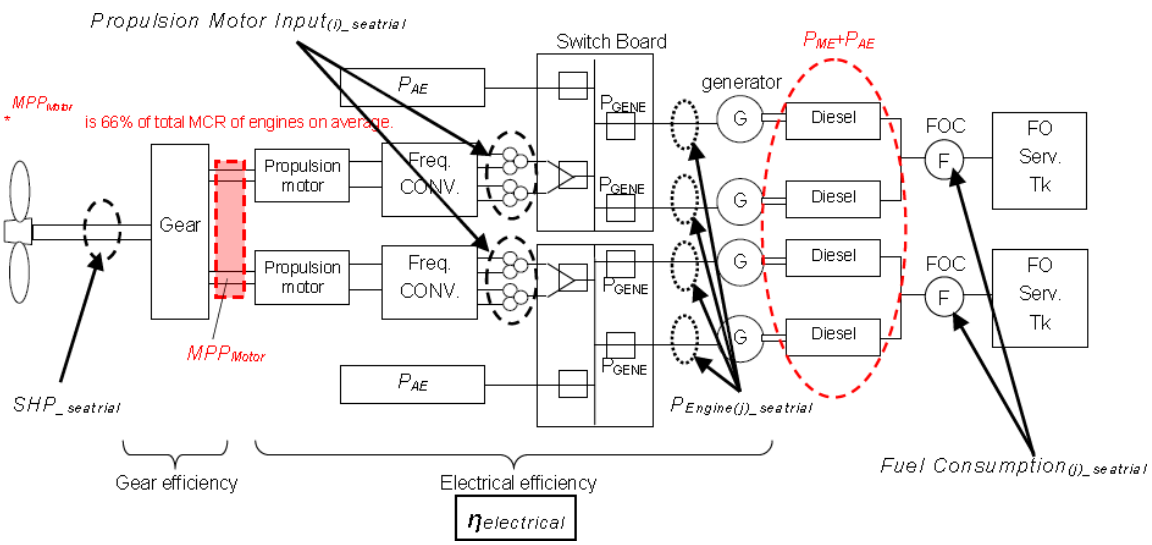

2) Specifications

MCR of main engines	10,000 (kW) x 3 + 6,400 (kW) x 1
MPP_{Motor}	24,000 (kW)
$SFC_{ME(i)_electric,\ gas\ mode\ at\ 75\%\ of\ MCR}$	161.6 (g/kWh) (for 10,000 (kW)-Engines) (SFC of the test report in the NOx technical file) 162.2 (g/kWh) (for 6,400 (kW)-Engine) (Ditto)
$SFC_{ME(i)_Pilotfuel}$	6.0 (g/kWh) (for 10,000 (kW)-Engines), 6.1 (g/kWh) (for 6,400 (kW)-Engine)
Deadweight	75,500 (ton)

3) $\eta_{electrical}$ at sea trial

$\eta_{electrical}$ is set as 0.913 in accordance with paragraph 2.2.5.1 of the "2022 guidelines on the method of calculation of the attained energy efficiency design index (EEDI) for new ships".

***4)* Calculation of P_{ME}**

P_{ME} is calculated in accordance with paragraph 2.2.5.1 of the "2022 guidelines on the method of calculation of the attained energy efficiency design index (EEDI) for new ships".

$$P_{ME} = 0.83 \times \frac{MPP_{Motor}}{\eta_{electricity}}$$
$$= 0.83 \times \frac{24{,}000}{0.913} = 21{,}818(kW)$$

***5)* Calculation of P_{AE}**

P_{AE} is calculated in accordance with paragraph 2.2.5.6.1 and 2.2.5.6.3 of the "2022 guidelines on the method of calculation of the attained energy efficiency design index (EEDI) for new ships".

$$P_{AE} = \left(0.025 \times \sum_{i=1}^{nME} MCR_{ME(i)} + \sum_{i=1}^{nPTI} PTI(i) \Big/ 0.75\right) + 250 \qquad and/or;$$
$$+CargoTankCapacity_{LNG} \times BOR \times COP_{reliquery} \times R_{reliquery} \quad \ldots(1)\ and/or;\ (Not\ Applicable)$$
$$+0.33 \times \sum_{i=1}^{nME} SFC_{ME(i),gasmode} \times \frac{P_{ME(i)}}{1000} \quad \ldots(2)\ and/or;\ (Not\ Applicable)$$
$$+0.02 \times \sum_{i=1}^{nME} P_{ME(i)} \quad \ldots(3)$$
$$= \{(0.025 \times 24{,}000) + 250\} + 0 + 0 + (0.02 \times 21{,}818)$$
$$= 1{,}286(kW)$$

Note:
*1: The value of MPP_{Motor} is used instead of MCR_{ME} in accordance with paragraph 2.2.5.6.3.4

6) V_{ref} at EEDI condition

V_{ref} is obtained by the speed-power curves as a result of the sea trial in accordance with paragraph 4.3.9 of the "2022 guidelines on survey and certification of the energy efficiency design index (EEDI)" as amended. Suppose that V_{ref} of 18.5kn is obtained at 83% of MPP_{Motor}, in this example calculation at sea trial.

7) Calculation of the attained EEDI at sea trial

EEDI is calculated in accordance with paragraph 2 of the "2022 guidelines on the method of calculation of the attained energy efficiency design index (EEDI) for new ships". The primary fuel is LNG in this example calculation. In this case, $SFC_{AE(i)_electric,\ gas\ mode\ at\ 75\%\ of\ MCR}$ is equal to $SFC_{ME(i)_electric,\ gas\ mode\ at\ 75\%\ of\ MCR}$, and $SFC_{AE(i)_Pilotfuel}$ is equal to $SFC_{ME(i)_Pilotfuel}$.

$$EEDI = \frac{P_{ME} \cdot \left(C_{FME_Gas} \cdot SFC_{ME_Gas} + C_{FME_Pilotfuel} \cdot SFC_{ME_Pilotfuel}\right) + P_{AE} \cdot \left(C_{FAE_Gas} \cdot SFC_{AE_Gas} + C_{FAE_Pilotfuel} \cdot SFC_{AE_Pilotfuel}\right)}{Capacity \cdot V_{ref}}$$

$$= \frac{21{,}818 \times (2.750 \times 161.7 + 3.206 \times 6.0) + 1{,}286 \times (2.750 \times 161.7 + 3.206 \times 6.0)}{75{,}500(\mathrm{DWT}) \times 18.5(\mathrm{kn})} = 7.67$$

Note:

*1: The average weighed value of $SFC_{ME(i)_electric,\ gas\ mode\ at\ 75\%\ of\ MCR}$ and $SFC_{AE(i)_electric,\ gas\ mode\ at\ 75\%\ of\ MCR}$ is used;.

$$\frac{161.6 \times 10{,}000(\mathrm{kW}) \times 3 + 162.2 \times 6{,}400(\mathrm{kW})}{10{,}000(\mathrm{kW}) \times 3 + 6{,}400(\mathrm{kW})} = 161.7(\mathrm{g/kWh})$$

*2: The average weighed value of $SFC_{ME(i)_Pilotfuel}$ and $SFC_{AE(i)_Pilotfuel}$ is used;

$$\frac{6.0 \times 10{,}000(\mathrm{kW}) \times 3 + 6.1 \times 6{,}400(\mathrm{kW})}{10{,}000(\mathrm{kW}) \times 3 + 6{,}400(\mathrm{kW})} = 6.0(\mathrm{g/kWh})$$

Appendix 6.3
Sample calculation for LNG carrier having diesel driven with re-liquefaction system

1. Preliminary calculation of attained EEDI at design stage

Attained EEDI for LNG carrier having diesel driven with re-liquefaction system at design stage is calculated as follows.

1) Specifications

$MCR_{ME(i)}$	18,660 x 2 (kW) = 37,320 (kW)
$SFC_{ME(i)_at\ 75\%\ of\ MCR}$	165.0 (g/kWh)
$SFC_{AE(i)_at\ 50\%\ of\ MCR}$	198.0 (g/kWh)
$CargoTankCapacity_{LNG}$	211,900 (m3)
BOR	0.15 (%/day)
$COP_{cooling}$	0.166
$COP_{reliquefy}$	15.142

$$\left[COP_{reliquefy} = \frac{425(kg/m^3) \times 511(kJ/kg)}{24(h) \times 3600(sec) \times COP_{cooling}} = 15.142\right]$$

$R_{reliquefy}$	1
$Deadweight$	109,000 (ton)

2) Calculation of P_{ME}

P_{ME} is calculated in accordance with paragraph 2.2.5.1 of the "2022 guidelines on the method of calculation of the attained energy efficiency design index (EEDI) for new ships".

$$P_{ME(i)} = 0.75 \times MCR_{ME(i)}$$
$$= 0.75 \times (18{,}660 + 18{,}660) = 27{,}990(\text{kW})$$

3) Calculation of P_{AE}

P_{AE} is calculated in accordance with paragraph 2.2.5.6.1 and 2.2.5.6.3 of the "2022 guidelines on the method of calculation of the attained energy efficiency design index (EEDI) for new ships".

P_{AE} = 0.025 x Σ $0.0_{ME(i)}$ + 250
+ $CargoTankCaipacity_{LNG}$ x BOR x $COP_{reliquefy}$ x $R_{reliquefy}$
= 0.025 x 37,320 +250
+ 211,900 x 0.15/100 x 15.142 x 1
= 5,996 (kW)

4) V_{ref} at EEDI condition

V_{ref} is obtained by the preliminary speed-power curves as the model tank test results at EEDI condition at design stage.

Suppose that V_{ref} of 19.7kn is obtained at 75% of $MCR_{ME(i)}$, in this example calculation at design stage.

5) Calculation of the attained EEDI on design stage

EEDI is calculated in accordance with paragraph 2 of the "2022 guidelines on the method of calculation of the attained energy efficiency design index (EEDI) for new ships".

$$EEDI = \frac{P_{ME} \cdot C_{FME} \cdot SFC_{ME} + P_{AE} \cdot C_{FAE} \cdot SFC_{AE}}{Capacity \cdot V_{ref}}$$

$$EEDI = \frac{27{,}990 \times 3.206 \times 165.0 + 5{,}996 \times 3.206 \times 198.0}{109{,}000(DWT) \times 19.7(kn)} = 8.668$$

2. Final calculation of attained EEDI at sea trial

Attained EEDI for LNG carrier having diesel driven with re-liquefaction system at sea trial is calculated as follows.

1) Specifications

$MCR_{ME(i)}$	18,660 x 2 (kW) = 37,320 (kW)
$SFC_{ME(i)_at\ 75\%\ of\ MCR}$	165.5 (g/kWh)
$SFC_{AE(i)_at\ 50\%\ of\ MCR}$	198.5 (g/kWh)
$CargoTankCapacity_{LNG}$	211,900 (m^3)
BOR	0.15 (%/day)
$COP_{cooling}$	0.166
$COP_{reliquefy}$	15.142

$$COP_{reliquefy} = \frac{425\,(kg/m^3) \times 511\,(kJ/kg)}{24\,(h) \times 3600\,(\sec) \times COP_{cooling}} = 15.142$$

$R_{reliquefy}$	1
Deadweight	109,255 (ton)

$SFC_{ME(i)_at\ 75\%\ of\ MCR}$ and $SFC_{AE(i)_at\ 50\%\ of\ MCR}$ are in accordance with paragraph 2.2.7.1 of the "2022 guidelines on the method of calculation of the attained energy efficiency design index (EEDI) for new ships".

Deadweight is in accordance with paragraph 4.3.10 of the "2022 guidelines on survey and certification of the energy efficiency design index (EEDI)" as amended.

2) Measured values at sea trial

Relation between $SHP_{seatrial}$ and Ship's speed shall be measured and verified at sea trial.

3) Calculation of P_{ME}

P_{ME} is calculated in accordance with paragraph 2.2.5.1 of the "2022 guidelines on the method of calculation of the attained energy efficiency design index (EEDI) for new ships".

$$P_{ME(i)} = 0.75 \times MCR_{ME(i)}$$
$$= 0.75 \times (18{,}660 + 18{,}660) = 27{,}990(\text{kW})$$

4) Calculation of P_{AE}

P_{AE} is calculated in accordance with paragraph 2.2.5.6.3.1 of the "2022 guidelines on the method of calculation of the attained energy efficiency design index (EEDI) for new ships".

P_{AE} = 0.025 x Σ $0.0_{ME(i)}$ + 250
+ $CargoTankCaipacity_{LNG}$ x *BOR* x $COP_{reliquefy}$ x $R_{reliquefy}$
= 0.025 x 37,320 +250
+ 211,900 x 0.15/100 x 15.142 x 1
= 5,996 (kW)

5) V_{ref} at EEDI condition

V_{ref} is obtained by the speed-power curves as a result of the sea trial in accordance with paragraph 4.3.9 of the“2022 guidelines on survey and certification of the energy efficiency design index (EEDI)” as amended.

Suppose that V_{ref} of 19.8kn is obtained at 75% of $MCR_{ME(i)}$, in this example calculation at sea trial.

6) Calculation of the attained EEDI at sea trial

EEDI is calculated in accordance with paragraph 2 of the “2022 guidelines on the method of calculation of the attained energy efficiency design index (EEDI) for new ships”.

$$EEDI = \frac{P_{ME} \cdot C_{FME} \cdot SFC_{ME} + P_{AE} \cdot C_{FAE} \cdot SFC_{AE}}{Capacity \cdot V_{ref}}$$

$$EEDI = \frac{27{,}990 \times 3.206 \times 165.5 + 5{,}996 \times 3.206 \times 198.5}{109{,}255(DWT) \times 19.8(kn)} = 8.629$$

Appendix 6.4
Sample calculation for LNG carrier having steam turbine propulsion system

1. Preliminary calculation of attained EEDI at design stage

Attained EEDI for LNG carrier having steam turbine propulsion system at design stage is calculated as follows.

1) Specifications

$MCR_{Steam\ turbine}$	25,000 (kW)
$SFC_{Steam\ turbine}$	241.0 (g/kWh)
Deadweight	75,000 (ton)

2) Calculation of P_{ME}

P_{ME} is calculated in accordance with paragraph 2.2.5.1 of the"2022 guidelines on the method of calculation of the attained energy efficiency design index (EEDI) for new ships".

$$P_{ME} = 0.83 \times MCR_{SteamTurbine}$$
$$= 0.83 \times 25{,}000 = 20{,}750(\mathrm{kW})$$

3) Calculation of P_{AE}

P_{AE} is treated as 0(zero) because electric load ($P_{generator_seatrial}$) is supposed to be included in $SFC_{SteamTurbine}$, in accordance with paragraph 2.2.5.6.5 and 2.2.7.2.1 of the "2022 guidelines on the method of calculation of the attained energy efficiency design index (EEDI) for new ships".

P_{AE} = 0

4) V_{ref} at EEDI condition

V_{ref} is obtained by the preliminary speed-power curves as the model tank test results at EEDI condition at design stage.

Suppose that V_{ref} of 18.7kn is obtained at 83% of $MCR_{SteamTurbine}$, in this example calculation at design stage.

5) Calculation of the attained EEDI on design stage

EEDI is calculated in accordance with paragraph 2 of the "2022 guidelines on the method of calculation of the attained energy efficiency design index (EEDI) for new ships".
The primary fuel is LNG in this example calculation.

$$EEDI = \frac{P_{ME} \cdot C_{FME} \cdot SFC_{ME} + P_{AE} \cdot C_{FAE} \cdot SFC_{AE}}{Capacity \cdot V_{ref}}$$

$$EEDI = \frac{20{,}750 \times 2.750 \times 241.0 + 0}{75{,}000(DWT) \times 18.7(kn)} = 9.81$$

2. Final calculation of attained EEDI at sea trial

Attained EEDI for LNG carrier having steam turbine propulsion system at sea trial is calculated as follows.

1) Typical configuration and example of measurement points at sea trial

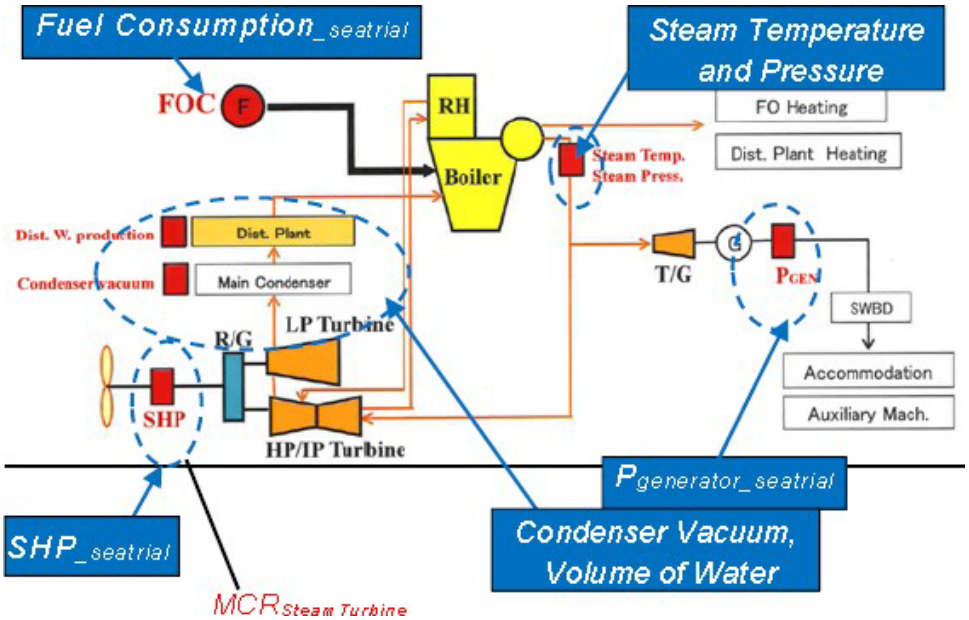

In addition to the above, in order to correct measured *Fuel Consumption* to the design conditions corresponding to the SNAME condition, inlet air temperature, sea water temperature, steam temperature, steam pressure, etc. are measured, as appropriate.

P_{AE} is treated as 0(zero) because electric load ($P_{generator_seatrial}$) is supposed to be included in $SFC_{SteamTurbine}$, in accordance with paragraph 2.2.5.6.5 and 2.2.7.2.1 of the " 2022 guidelines on the method of calculation of the attained energy efficiency design index (EEDI) for new ships".

2) Specifications

$MCR_{Steam\ turbine}$	25,000 (kW)
$SFC_{Steam\ turbine}$	241.0 (g/kWh)
Deadweight	75,000 (ton)

3) Measured values at sea trial

$P_{generator_seatrial}$	980 (kW)
$SHP_{seatrial}$	21,520 (kW)
$Fuel\ Consumption_{_seatrial}$	5.95 x 10^6 (g/hour)

Each Fuel Consumption$_{(j)_seatrial}$ should be corrected in accordance with paragraph 2.2.7.2 of the "2022 guidelines on the method of calculation of the attained energy efficiency design index (EEDI) for new ships".

Coefficient of flow meter	1.0010
Steam temperature	500 degree Celsius
Steam pressure	5.85 (MPaG)

Condenser vacuum	725 (mmHg)
Dist. water production	28.5 (t/day)
Inlet air temperature of FAN	45 degree Celsius

Lower calorific value of fuel used at sea trial 42,030 (kJ/kg)

4) Calculation of $SFC_{SteamTurbine}$ at sea trial

$SFC_{SteamTurbine}$ is calculated in accordance with paragraph 2.2.7.2 of the "2022 guidelines on the method of calculation of the attained energy efficiency design index (EEDI) for new ships".

$$SFC_{SteamTurbine_SeaTrial(i)} = \frac{FuelConsumption_{SeaTrial}}{SHP_{SeaTrial}}$$

$$= \frac{5.95 \times 10^6}{21{,}520} \times C_1 \times C_2 \times C_3 \times C_4 \times C_5 \times C_6 \times C_7^{*1}$$

$$= \frac{5.95 \times 10^6}{21{,}520} \times 0.9871 \times 0.8756 \times 1.0010 \times 1.0010 \times 1.0035 \times 0.9999 \times 1.0028$$

$$= 240.7\ (g/kWh)$$

Note:

*1: *SFC* should be corrected to the value corresponding to SNAME and EEDI conditions, in accordance with paragraph 2.2.7.2 .2 and .3 of the "2022 guidelines on the method of calculation of the attained energy efficiency design index (EEDI) for new ships". Coefficients from C1 to C7 represent as follows.

C1: Coefficient of electric power to the electric load equivalent to

P_{AE} = 0.025 x $MCR_{Steam\ turbine}$ + 250 = 875 (kW)

C2: Coefficient of LCV to the standard LCV of 48,000 kJ/kg for LNG fuel
C3: Coefficient of flow meter
C4: Coefficient of steam temperature and steam pressure
C5: Coefficient of condenser vacuum for steam turbine
C6: Coefficient of water feed of condenser
C7: Coefficient of inlet air temperature

$SFC_{SteamTurbine}$ is calculated as the value to include all losses of machinery and, gears necessary for main propulsion system and the specified electric load of P_{AE}.

Minimum two $SFC_{SteamTurbine}$ at around the EEDI power are obtained at the sea trial. However in this example calculation, all $SFC_{SteamTurbine\ (i)}$ are supposed to the same value of 240.7 g/kWh.

***5)* Calculation of P_{ME}**

P_{ME} is calculated in accordance with paragraph 2.2.5.1 of the "2022 guidelines on the method of calculation of the attained energy efficiency design index (EEDI) for new ships".

$$P_{ME} = 0.83 \times MCR_{SteamTurbine}$$

$$= 0.83 \times 25{,}000 = 20{,}750\ (kW)$$

6) Calculation of P_{AE}

P_{AE} is treated as 0(zero) because electric load ($P_{generator_seatrial}$) is supposed to be included in $SFC_{SteamTurbine}$, in accordance with paragraph 2.2.5.6.5 and 2.2.7.2.1 of the "2022 guidelines on the method of calculation of the attained energy efficiency design index (EEDI) for new ships".

P_{AE} = 0

7) V_{ref} at EEDI condition

V_{ref} is obtained by the speed-power curves as a result of the sea trial in accordance with paragraph 4.3.9 of the "2022 guidelines on survey and certification of the energy efficiency design index (EEDI)" as amended.

Suppose that V_{ref} of 18.8kn is obtained at 83% of $MCR_{SteamTurbine}$, in this example calculation at sea trial.

8) Calculation of the attained EEDI at sea trial

EEDI is calculated in accordance with paragraph 2 of the "2022 guidelines on the method of calculation of the attained energy efficiency design index (EEDI) for new ships".
The primary fuel is LNG in this example calculation.

$$EEDI = \frac{P_{ME} \cdot C_{FME} \cdot SFC_{ME} + P_{AE} \cdot C_{FAE} \cdot SFC_{AE}}{Capacity \cdot V_{ref}}$$

$$= \frac{20{,}750 \times 2.750 \times 240.7 + 0}{75{,}000(DWT) \times 18.8(kn)} = 9.74$$

End of Document