Requirements concerning

MATERIALS AND WELDING

CONTENTS

W1	Material and welding for ships carrying liquefied gases in bulk and ships using gases or other low-flashpoint fuels	Rev.4 Apr 2021
W2	Test specimens and mechanical testing procedures for materials	Rev.3 Sep 2021
W3	Deleted	
W4	Deleted	
W5	Deleted	
W6	Deleted	
W7	Hull and machinery steel forgings	Rev.4 Feb 2022
W8	Hull and machinery steel castings	Rev.3 Mar 2022
W9	Grey iron castings	Rev.2 May 2004
W10	Spheroidal or nodular graphite iron castings	Rev.2 May 2004
W11	Normal and higher strength hull structural steels	Rev.9 May 2017
W12	Deleted	
W13	Thickness tolerances of steel plates and wide flats	Rev.7 Sep 2021
W14	Steel plates and wide flats with specified minimum through thickness properties (“Z” quality)	Rev.3 Sep 2021
W15	Deleted	
W16	High strength steels for welded structures	Rev.3 Mar 2016

W17	Approval of consumables for welding normal and higher strength hull structural steels	Rev.6 Sep 2021
W18	Anchor chain cables and accessories including chafing chain for emergency towing arrangements	Rev.6 Sep 2021
W19	Normal and higher strength hull structural steel grades E and E36 with thicknesses above 50 up to 100 mm - superseded by W11, 1995	Deleted
W20	Higher strength hull structural steels with a minimum yield strength of 390 N/mm^2 - superseded by W11, 1995	Deleted
W21	Hull structural steels for low temperature application - superseded by W11, 1995	Deleted
W22	Offshore mooring chain	Rev.6 June 2016
W23	Approval of Welding Consumables for High Strength Steels for Welded Structures	Corr.1 June 2019
W24	Cast copper alloy propellers	Rev.5 Sep 2023
W25	Aluminium alloys for hull construction and marine structure	Rev.6 Sep 2021
W26	Requirements for welding consumables for aluminium alloys	Rev.2 Sep 2021
W27	Cast steel propellers	Rev.3 Sep 2023
W28	Welding procedure qualification tests of steels for hull construction and marine structures	Rev.2 Mar 2012
W29	Requirements for manufacture of anchors	June 2005
W30	Normal and higher strength corrosion resistant steels for cargo oil tanks	Del 1 July 2015
W31	YP47 Steels and Brittle Crack Arrest Steels	Rev.3 Mar 2023

W32	Qualification scheme for welders of hull structural steels	Rev.1 Sep 2020
W33	Non-destructive testing of ship hull steel welds	Corr.1 Aug 2021
W34	Advanced non-destructive testing of materials and welds	Dec 2019
W35	Requirements for NDT Service Suppliers	Rev.1 Oct 2023

W1
(1975)
(Rev.1
1984)
(Rev.2
May 2004)
(Rev.3
Aug 2016)
(Rev.4
Apr 2021)

Material and welding for ships carrying liquefied gases in bulk and ships using gases or other low-flashpoint fuels

1 Scope

1.1 This document gives additional requirements to the ones prescribed in the International Code for the Construction and Equipment of Ships Carrying Liquefied Gases in Bulk (IGC Code) or International Code of Safety for Ships using Gases or other low-flashpoint Fuels (IGF Code).

1.2 The manufacture, testing, inspection and documentation shall be in accordance with the general practice of the Classification Society.

2 Material requirements

In addition to IGC Code Table 6.1 or IGF Code Table 7.1 for design temperature not lower than 0°C, the following applies.

Table 1 Plates, pipes (seamless and welded), sections and forgings for cargo tanks, fuel tanks and process pressure vessels for design temperatures not lower than 0°C.

CHARPY V-NOTCH IMPACT TEST REQUIREMENTS		
TEST TEMPERATURE	Thickness t (mm)	Test temperature (°C)
	40 < t ≤ 50 (1)	-20 (2)
	40 < t ≤ 50 (1)	-30 (3)
NOTES:		
(1) A further set of impact test at mid thickness for products with t>40mm is required except rolled steels specified in UR W11 or W16. (2) Applies to type C independent tanks and process pressure vessels. In addition, post-weld stress relief heat treatment shall be performed. Exemption to post-weld stress relief heat treatment based on alternative approach (e.g. Engineering Critical Assessment) shall be approved by the Classification Society or shall be to recognized standards. (3) Applies to cargo tank or fuel tank other than type C.		

Note:

1. Rev.3 of this UR is to be uniformly implemented by IACS Societies to ships contracted for construction on or after 1 January 2017.

2. The “contracted for construction” date means the date on which the contract to build the vessel is signed between the prospective owner and the shipbuilder. For further details regarding the date of “contract for construction”, refer to IACS Procedural Requirement (PR) No. 29.

3. Rev.4 of this UR is to be uniformly implemented by IACS Societies to ships contracted for construction on or after 1 July 2022.

W1 (cont)

In addition to IGC Code Table 6.2 or IGF Code Table 7.2, the following applies:

Table 2a Plates, sections and forgings for cargo tanks, fuel tanks, secondary barriers and process pressure vessels for design temperatures below 0°C and strictly down to -10°C

CHARPY V-NOTCH IMPACT TEST REQUIREMENTS		
TEST TEMPERATURE	Thickness t (mm)	Test temperature (°C)
	40 < t ≤ 50 (1)	5°C below design temperature or –20°C, whichever is lower (2)
	40 < t ≤ 45 (1)	25 °C below design temperature (3)
	45 < t ≤ 50 (1)	30 °C below design temperature (3)
NOTES:		
(1) A further set of impact test at mid thickness for products with t>40mm is required except rolled steels specified in UR W11 or W16. (2) Applies to type C independent tanks and process pressure vessels. In addition, post-weld stress relief heat treatment shall be performed. Exemption to post-weld stress relief heat treatment based on alternative approach (e.g. Engineering Critical Assessment) shall be approved by the Classification Society or shall be to recognized standards. (3) Applies to cargo tank or fuel tank other than type C.		

Table 2b Plates, sections and forgings for cargo tanks, fuel tanks, secondary barriers and process pressure vessels for design temperatures below -10°C and down to -55°C

CHARPY V-NOTCH IMPACT TEST REQUIREMENTS		
TEST TEMPERATURE	Thickness t (mm)	Test temperature (°C)
	40 < t ≤ 50 (1)	5°C below design temperature or –20°C, whichever is lower (2)
	40 < t ≤ 45 (1)	25 °C below design temperature (3)
	45 < t ≤ 50 (1)	30 °C below design temperature (3)
NOTES:		
(1) A further set of impact test at mid thickness for products with t>40mm is required except rolled steels specified in UR W11 or W16. (2) IGC code section 6.6.2.2 applies with regards to post-weld stress relief heat treatment. Exemption to post-weld stress relief heat treatment based on alternative approach (e.g. Engineering Critical Assessment) shall be approved by the Classification Society or shall be to recognized standards. (3) Applies to cargo tank or fuel tank other than type C.		

In addition to IGC Code Table 6.3 or IGF Code Table 7.3, the following applies:

Table 3 Plates, sections and forgings for cargo tanks, fuel tanks, secondary barriers and process pressure vessels for design temperatures below -55°C and down to -165°C.

CHARPY V-NOTCH IMPACT TEST REQUIREMENTS	
40 < t ≤ 45 mm (1)	25°C below design temperature
45 < t ≤ 50 mm (1)	30°C below design temperature
(1) A further set of impact test at mid thickness for products with t>40mm is required except rolled steels specified in UR W11 or W16.	

End of Document

W2 Test specimens and mechanical testing procedures for materials

(Rev.1 1995) (Rev.2 July 2003) (Rev.3 Sep 2021)

W2.1 Scope

W2.1.1 This document gives the requirements for test specimens when testing ferrous and non-ferrous metals.

W2.1.2 The corresponding testing procedures generally are to follow established practice as laid down in international and national standards. Some testing procedures are given in this document.

W2.1.3 Alternative specimens, such as those complying with recognized national standards, may be accepted subject to special approval by the Classification Society. The same applies to the given testing procedures.

W2.2 General

W2.2.1 Test samples from which test specimens are cut are to have undergone the same treatment as the material from which they have been taken (e.g. heat treatment).

W2.2.2 If test samples are cut from material by flame cutting or shearing, a reasonable margin is required to enable sufficient material to be removed from the cut edges during final machining.

W2.2.3 The preparation of test specimens is to be done in such a manner that test specimens are not subjected to any significant straining or heating.

W2.2.4 Any of the test specimens referred to as 'alternative' may be used except as otherwise stated or agreed.

Note:

1. Changes introduced in Rev.3 are to be uniformly implemented by IACS Societies on ships contracted for construction on or after 1 January 2023 and when the application for certification of steel plates is dated on or after 1 January 2023.

2. The “contracted for construction” date means the date on which the contract to build the vessel is signed between the prospective owner and the shipbuilder. For further details regarding the date of “contract for construction”, refer to IACS Procedural Requirement (PR) No. 29.

W2 (cont)

W2.3 Testing machines

W 2.3.1 All tests are to be carried out by competent personnel. Testing machines are to be maintained in a satisfactory and accurate condition and are to be recalibrated at approximately annual intervals. This calibration is to be traced to a nationally recognised authority and is to be to the satisfaction of the Classification Society.

Impact testing machines are to be calibrated in accordance with ISO 148-2:2016 or other recognised standard.

The accuracy of tensile test machines is to be within ± one per cent.

Tension/compression testing machines are to be calibrated in accordance with ISO 7500-1:2018 or other recognised standard.

W2.4 Tensile test specimens

W2.4.1 Designations

The following designations are used:

- d = diameter
- a = thickness
- b = width
- L_0 = original gauge length
- L_c = parallel length
- S_0 = original cross sectional area
- R = transition radius
- D = external tube diameter
- t = plate thickness

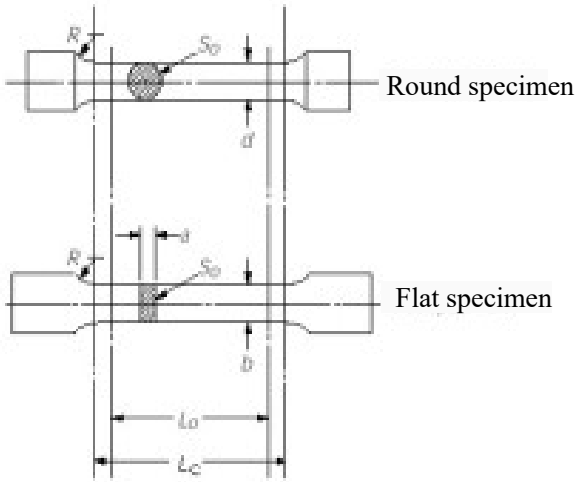

W2.4.2 Dimensions

W2.4.2.1 General

Proportional test specimens with a gauge length $Lo = 5{,}65\sqrt{S_0}$

or = 5 d should preferably be used as the minimum percentage elongation values specified in the W Unified Requirements refer to this gauge length, L_0 should preferably be greater than 20mm. The gauge length may be rounded off to the nearest 5 mm provided that the difference between this length and Lo is less than 10% of Lo.

W 2.4.2.2 Plates, strips and sections

Flat specimens are usually to be used with dimensions as specified below

a) Proportional flat specimen

$a = t$
$b = 25\ mm$
$Lo = 5{,}65\sqrt{S_0}$
$Lc = Lo + 2\sqrt{S_0}$
$R = 25\ mm$

W2 (cont)

b) Non-proportional flat specimen

a = t
b = 25 mm
Lo = 200 mm
Lc ≥ 212.5 mm
R = 25 mm

When the capacity of the available testing machine is insufficient to allow the use of test specimen of full thickness, this may be reduced by machining one of the rolled surfaces. Alternatively, for materials over about 40 mm thick, proportional round test specimens with dimensions as specified below, may be used.

c) Round specimen

d ≥ 10 mm to 20 mm, preferably 14 mm
Lo = 5d
$Lc \geq Lo + \frac{d}{2}$

R = 10 mm (for nodular cast iron and materials with a specified elongation less than 10%, R ≥ 1,5 d)

The axes of the round test specimens are to be located at approximately one quarter of the thickness from one of the rolled surfaces.

W2.4.2.3 Aluminium Alloys

Flat tensile test specimens shall be used for specified thicknesses up to and including 12.5mm. The tensile test specimen shall be prepared so that both rolled surfaces are maintained. For thicknesses exceeding 12.5mm, round tensile test specimens will be used. For thicknesses up to and including 40mm, the longitudinal axis of the round tensile test specimen shall be located at a distance from the surface equal to half of the thickness. For thicknesses over 40mm, the longitudinal axis of the round tensile test specimen shall be located at a distance from one of the surfaces equal to one quarter of the thickness.

W2.4.2.4 Forgings, castings (excluding grey cast iron)

Proportional round test specimens with dimensions as specified above in W2.4.2.2.c) are usually to be used.
For small size bars and similar products the test specimens may consist of a suitable length of bar or other product tested in the full cross-section.

W2.4.2.5 Tubes

The test specimen shall conform with the following :

a) full cross-section specimen with plugged ends :

$Lo = 5{,}65\sqrt{S_0}$

W2
(cont)

Lc ≥ 5, 65 $\sqrt{S_0}$ + $\frac{D}{2}$ *where Lc is the distance between the grips or the plugs, whichever is the smallest.*

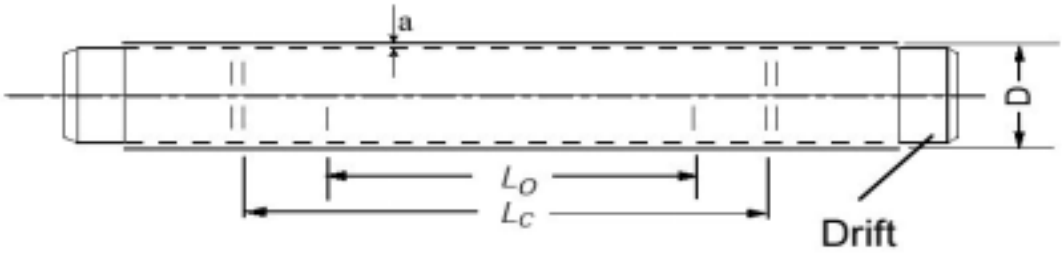

b) Strips cut longitudinally

a = t
b ≥ 12 mm
Lo = 5,65 $\sqrt{S_0}$
Lc = Lo + 2b

The parallel test length is not to be flattened, but the enlarged ends may be flattened for gripping in the testing machine.

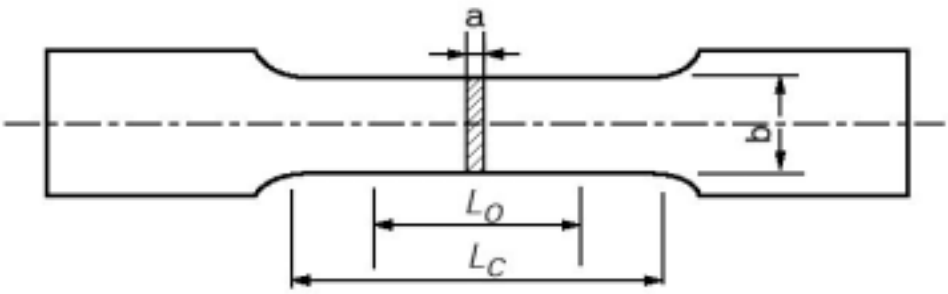

Round test specimens may also be used provided that the wall thickness is sufficient to allow the machining of such specimens to the dimensions given in W.2.4.2.2.c), with their axes located at the mid- wall thickness.

W2.4.2.6 Wires

Full cross-section test specimen with the following dimension is to be used:

Lo = 200 mm
Lc = Lo + 50 mm

W2.4.2.7 Grey cast iron

Round non-cylindrical machined test specimen as shown below is to be used.

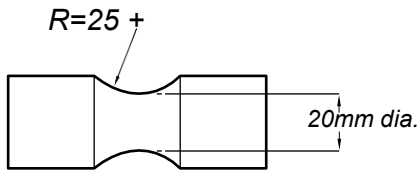

W2 (cont)

W2.4.2.8 Weldments

a) Deposited metal tensile test

Round specimen with the following dimensions is to be used :

d = 10 mm
Lo = 50 mm
Lc ≥ 55 mm
R ≥ 10 mm

For specially small or large dimensions other specimens may be used after agreement with the Classification Society, provided they conform with the geometrical relationship given in W2.4.2.2.c).

b) Butt weld tensile test

Flat specimen, the weld to be machined (or ground) flush with the surface of the plate, with the following dimensions is to be used :

a = t
b = 12 for t<2
b = 25 for t>2
Lc = width of weld + 60 mm
R > 25 mm

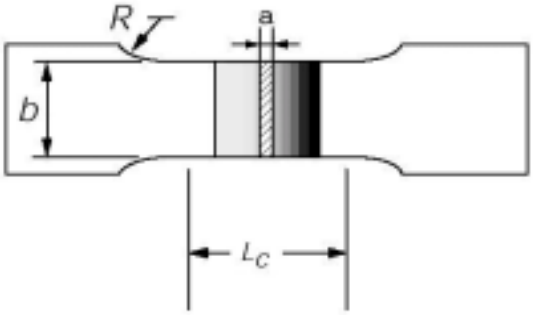

W2.4.2.9 Through thickness tensile test specimen

Round test specimens including built-up type by welding are to be prepared in accordance with a recognised standard.

W2.4.2.10 Tolerances

The tolerances on specimen dimensions are to be in accordance with ISO 6892-1:2019, ISO 6892-2:2018 or other recognised standards as appropriate.

W 2.4.3 Retest Procedure

When the tensile test fails to meet the requirements, two further tests may be made from the same piece. If both of these additional tests are satisfactory the item and/or batch (as applicable) is acceptable. If one or both of these tests fail the item and/or batch is to be rejected.

W2 (cont)

The additional tests detailed above are to be taken, preferably from material taken adjacent to the original tests, but alternatively from another test position or sample representative of the item/batch.

W2.5 Tensile properties at ambient temperature

W2.5.1 Yield stress (yield point)

The value of stress measured at the commencement of plastic deformation at yield, or the value of stress measured at the first peak obtained during yielding even when that peak is equal to or less than any subsequent peaks observed during plastic deformation at yield. The test is to be carried out with an elastic stress within the following limits:

Modulus of Elasticity of the material (E) N/mm^2	Rate of stressing N/mm^{2}s^{-1}	
	Min.	Max.
< 150 000	2	20
≥ 150 000	6	60

W2.5.2 Proof stress (yield strength)

When no well defined yield phenomenon exists, the 0.2% proof stress (*Rp0.2*) is to be determined according to the applicable specification. For austenitic and duplex stainless steel products, the 1% proof stress (*Rp1*) may be determined in addition to *Rp 0.2*.
The rate of loading shall be as stated in W2.5.1 above.

W2.5.3 Tensile strength (R_m)

After reaching the yield or proof load, for ductile material the machine speed during the tensile test is not to exceed that corresponding to a strain rate of 0.008s^{-1}. For brittle materials, such as cast iron, the elastic stress rate is not to exceed 10 N/mm^2 per second.

W2.5.4 Fracture elongation (*A*)

The elongation value is, in principle, valid only if the distance between the fracture and the nearest gauge mark is not less than one third of the original gauge length. However the result is valid irrespective of the location of the fracture if the percentage elongation after fracture is equal to or greater than the expected value.

The elongation generally means elongation A_5 determined on a proportional gauge length

$$5.65\sqrt{S_0} = 5d$$

but may also be given for other specified gauge lengths.

If the material is a ferritic steel of low or medium strength and not cold worked and the elongation as measured on a non-proportional gauge length, the required elongation A_0 on that gauge length L0 may after agreement be calculated from the following formula:

$$A_0 = 2A_5\left(\frac{\sqrt{S_0}}{L_0}\right)^{0,40}$$

For tables and graphs see ISO 2566-1:1984; ISO 2566-2:1984.

W2 (cont)

W2.6 Bend test specimen

W2.6.1 Flat bend test specimen, as given in the following, is to be used. Edges on tension side to be rounded to a radius of 1 to 2 mm.

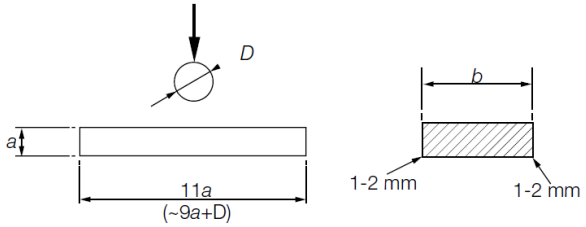

W2.6.2 Forgings, castings and semi-finished products

a = 20 mm
b = 25 mm

W2.6.3 Plates, structural sections, sheets:

a = t
b = 30 mm

W2.6.4 Butt welds, transverse specimen

a) face and root bend

a = t
b = 30 mm

If the as rolled thickness t is greater than 25 mm, it may be reduced to 25mm by machining on the compression side of the bend specimen.

The surfaces of the weld are to be machined (ground) flush with the surface of the plate.

b) side bend

a = 10 mm
b = t

If t ≥ 40 mm, the side-bend specimen may be subdivided, each part being at least 20 mm wide.

W2.6.5 Butt weld, longitudinal specimens

The test specimens, for longitudinal face and root test, are to be in accordance with an appropriate recognised standard.

W2.7 Toughness testing

W2.7.1 Charpy V-notch impact specimens

The test specimens shall comply with the following dimensions:

Dimensions	Nominal	Tolerances

W2 (cont)

Length		55 mm	± 0,60 mm
Width	-standard specimen	10 mm	± 0,11 mm
	-subsize specimen	7,5 mm	± 0,11 mm
	-subsize specimen	5 mm	± 0,06 mm
Angle of notch		45°	± 2°
Thickness		10 mm	± 0,06 mm
Depth below notch		8 mm	± 0,06 mm
Root radius		0,25 mm	± 0,025 mm
Distance of notch from end of test specimen		27,5 mm	± 0,42 mm
Angle between plane of symmetry of notch and longitudinal axis of test specimen		90°	± 2°

W2.7.2 Sub size Charpy requirements

The testing and requirements for smaller than 5,0mm size specimens are to be in accordance with the general practice of the Classification Society. Minimum average values for subsized specimens are as follows:

Charpy V-notch specimen size	Minimum energy, average of 3 specimens
10 mm x 10 mm	E
10 mm x 7,5 mm	5E/6
10 mm x 5,0 mm	2E/3

E = the values of energy specified for full thickness 10 mm x 10 mm specimens

All other dimensions and tolerances are to be as specified in W2.7.1.

Only one individual value may be below the specified average value provided it is not less than 70% of that value.

In all cases, the largest size Charpy specimens possible for the material thickness shall be machined.

W2.7.3 Testing machines and temperature control in Charpy V-notch impact testing

All impact tests are to be carried out on Charpy machines complying with the requirements of ISO 148-2:2016 or other national and international recognised standards, and having a striking energy of not less than 150 J.

Where the test temperature is other than ambient the temperature of the test specimen at the moment of breaking shall be the specified temperature within ±2°C.

W2.7.4 Charpy re-test procedure

Where specified the following Charpy re-test procedure will apply:

When the average value of the three initial Charpy V-notch impact specimens fails to meet the stated requirement, or the value for more than one specimen is below the required average value, or when the value of any one specimen is below 70% of the specified average value, three additional specimens from the same material may be tested and the results added to those previously obtained to form a new average. If this new average complies with the requirements and if not more than two individual results are lower than the required average and of these, not more than one result is below 70% of the specified average value the piece or batch (as specified for each product) may be accepted.

W2 (cont)

W2.7.5 Drop weight specimens

Drop weight specimens for determination of no–break performance according to ASTM E-208:2019 are to comply with this ASTM standard and have one of the following dimensions (mm):

Type P-1: 25 by 90 by 360
Type P-2: 19 by 50 by 130
Type P-3: 16 by 50 by 130

The following is to be noted if not otherwise specified:

the specimen sides shall be saw-cut or machined (minimum 25 mm to flame-cut surface)
the machining of the plate to prescribed specimen thickness shall be on one side only
the specimens may be of any orientation, but the orientation shall be the same for all specimens.

W2.8 Ductility tests for pipes and tubes

W2.8.1 Flattening test specimens

Length is to be from 10mm to 100mm. Plain and smoothed ends cut perpendicular to the tube axis. Reference is made to ISO 8492:2013.

W2.8.2 Drift expanding test

The lengths L of the drift expanding test specimens are to be as follows. Reference is made to ISO 8493:1998.

Metallic tubes: L equal to twice the external diameter D of the tube if the angle of the drift β is 30°, and L equal to 1.5D if the angle of the drift is 45° or 60°. The test piece may be shorter provided that after testing the remaining cylindrical portion is not less than 0.5D.

The rate of penetration of the mandrel shall not exceed 50mm/min.

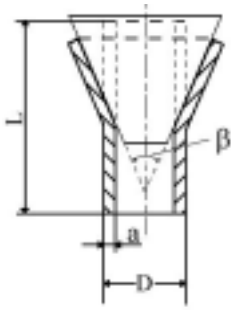

W2.8.3 Flanging test

The flanging test specimen is to be of length L equal to approximately 1.5D. The test piece may be shorter provided that after testing the remaining cylindrical portion is not less than 0,5D.

W2 (cont)

The rate of penetration of the forming tool shall not exceed 50mm/min. Reference is made to ISO 8494:2013.

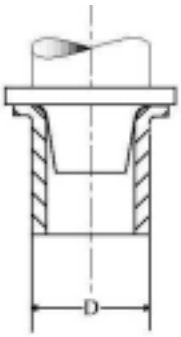

W2.8.4 Ring expanding test

The test piece consists of a ring having a length of between 10 and 16mm. The rate of penetration of the mandrel shall not exceed 30mm/s. Reference is made to ISO 8495:2013.

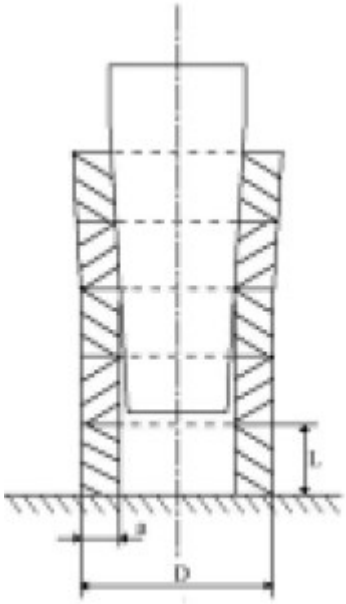

W2.8.5 Ring tensile test

The ring shall have a length of about 15mm with plain and smoothed ends cut perpendicular to the tube axis.
The ring is to be drawn to fracture by means of two mandrels placed inside the ring and pulled in tensile testing machine. The rate shall not exceed 5mm/s.
Reference is made to ISO 8496:2013.

End of Document

W3 Deleted

- due to being superseded by a new UR W2 (Rev. 1, 1995) “Test specimens and mechanical testing procedures for materials”. ◀◀

W4 Deleted

◀◀

W5 Deleted

◀◀

W6 Deleted

◀◀

W7 Hull and machinery steel forgings

(1978)
(Rev.1 1980)
(Rev.2 July 2002)
(Rev.3 May 2004)
(Rev.4 Feb 2022)

1 Scope

1.1 These requirements are applicable to steel forgings intended for hull and machinery applications as specified in the relevant IACS Unified requirements (e.g. UR M72, UR M68, etc.) and/or requirements of the Classification Society. Where relevant, these requirements are also applicable to material for forging stock and to rolled bars intended to be machined into components of simple shape.

1.2 These requirements are applicable only to steel forgings where the design and acceptance tests are related to mechanical properties at ambient temperature. For other applications, additional requirements may be necessary especially when the forgings are intended for service at low or elevated temperatures.

1.3 Alternatively, forgings which comply with national or proprietary specifications may be accepted provided such specifications give reasonable equivalence to these requirements or are otherwise specially approved or required by the Classification Society.

2 Manufacture

2.1 Forgings are to be made at a manufacturer approved by the Classification Society.

2.2 The steel used in the manufacture of forgings is to be made by a process approved by the Classification Society. The works at which the steel was produced is to be approved by the Classification Society. Where the steel is produced at a separate works to the forging, the steel manufacturer is also to be approved by the Classification Society.

2.3 Adequate top and bottom discards are to be made to ensure freedom from piping and harmful segregations in the finished forgings.

Note:

1. Rev. 4 of this Unified Requirement is to be uniformly implemented by IACS Societies on ships contracted for construction on or after 1 July 2023.

2. The “contracted for construction” date means the date on which the contract to build the vessel is signed between the prospective owner and the shipbuilder. For further details regarding the date of “contract for construction”, refer to IACS Procedural Requirement (PR) No. 29.

2.4 The plastic deformation is to be such as to ensure soundness, uniformity of structure and satisfactory mechanical properties after heat treatment. The reduction ratio is to be calculated with reference to the average cross-sectional area of the cast material. Where the cast material is initially upset, this reference area may be taken as the average cross-sectional area after this operation. Unless otherwise approved the total reduction ratio is to be at least:

- for forgings made from ingots or from forged blooms or billets, 3:1 where L>D and 1.5:1 where L≤D

- for forgings made from rolled products, 4:1 where L>D and 2:1 where L≤D

- for forgings made by upsetting, the length after upsetting is to be not more than one-third of the length before upsetting or, in the case of an initial forging reduction of at least 1.5:1, not more than one-half of the length before upsetting

- for rolled bars, 6:1.

L and D are the length and diameter respectively of the part of the forging under consideration.

2.5 For crankshafts, where grain flow is required in the most favourable direction having regard to the mode of stressing in service, the proposed method of manufacture may require special approval by the Classification Society. In such cases, tests may be required to demonstrate that a satisfactory structure and grain flow are obtained.

2.6 The shaping of forgings or rolled slabs and billets by flame cutting, scarfing or arc-air gouging is to be undertaken in accordance with recognized good practice and, unless otherwise approved, is to be carried out before the final heat treatment. Preheating is to be employed when necessitated by the composition and/or thickness of the steel.
For certain components, subsequent machining of all flame cut surfaces may be required.

2.7 When two or more forgings are joined by welding to form a composite component, the proposed welding procedure specification is to be submitted for approval. Welding procedure qualification tests are to be required.

2.8 UR W28 is applicable to the requirements for welding procedure qualification tests of steel forgings intended to be used for the components of hull construction and marine structures. Requirements for other WPS and qualification thereof, for welder certification and for type approval of welding consumables are at the discretion of the Class Societies.

2.9 Welders intended to be engaged in fusion welding of steel forgings for hull structures are to be qualified in accordance with UR W32: Qualification scheme for welders of hull structural steels Rev.1 2020.

3 Quality of forgings

3.1 All forgings are to be free from surface or internal defects which would be prejudicial to their proper application in service.

4 Chemical composition

4.1 All forgings are to be made from killed steel and the chemical composition is to be appropriate for the type of steel, dimensions and required mechanical properties of the forgings being manufactured.

W7 (cont)

4.2 The chemical composition of each heat is to be determined by the manufacturer on a sample taken preferably during the pouring of the heat. When multiple heats are tapped into a common ladle, the ladle analysis shall apply.

4.3 The chemical composition is to comply with the overall limits given in Tables 1 and 2 or, where applicable, the requirements of the approved specification.

4.4 At the option of the manufacturer, suitable grain refining elements such as aluminium, niobium or vanadium may be added. The content of such elements is to be reported.

4.5 Elements designated as residual elements in the individual specifications are not to be intentionally added to the steel. The content of such elements is to be reported.

Table 1 Chemical composition limits [1] for hull steel forgings [6]

Steel type	C	Si	Mn	P	S	Cr [4]	Mo [4]	Ni [4]	Cu [4]	Total residuals
C, C-Mn	0.23 [2], [3]	0.45	0.30-1.50	0.035	0.035	0.30	0.15	0.40	0.30	0.85
Alloy	[5]	0.45	[5]	0.035	0.035	[5]	[5]	[5]	0.30	-

[1] Composition in percentage mass by mass maximum unless shown as a range.

[2] The carbon content may be increased above this level provided that the carbon equivalent (Ceq) is not more than 0.41%, calculated using the following formula:

$$\text{Ceq} = C + \frac{Mn}{6} + \frac{Cr + Mo + V}{5} + \frac{Ni + Cu}{15} \ (\%)$$

[3] The carbon content of C and C-Mn steel forgings not intended for welded construction may be 0.65 maximum.

[4] Elements are considered as residual elements.

[5] Specification is to be submitted for approval.

[6] Rudder stocks and pintles should be of weldable quality.

Table 2 Chemical composition limits [1] for machinery steel forgings

Steel type	C	Si	Mn	P	S	Cr [4]	Mo [4]	Ni [4]	Cu [4]	Total residuals
C, C-Mn	0.23 [2], [3]	0.45	0.30-1.50	0.035	0.035	0.30	0.15	0.40	0.30	0.85
Alloy [5]	0.45	0.45	0.30-1.00	0.035	0.035	Min. 0.40 [6]	Min. 0.15 [6]	Min. 0.40 [6]	0.30	-

[1] Composition in percentage mass by mass maximum unless shown as a range or as a minimum.

[2] The carbon content may be increased above this level provided that the carbon equivalent (Ceq) is not more than 0.41%.

[3] The carbon content of C and C-Mn steel forgings not intended for welded construction may be 0.65 maximum.

[4] Elements are considered as residual elements unless shown as a minimum.

[5] Where alloy steel forgings are intended for welded constructions, the proposed chemical composition is subject to approval by the Classification Society.

[6] One or more of the elements is to comply with the minimum content.

W7
(cont)

5 Heat treatment (including surface hardening and straightening)

5.1 At an appropriate stage of manufacture, after completion of all hot working operations, forgings are to be suitably heat treated to refine the grain structure and to obtain the required mechanical properties.

5.2 Except as provided in 5.6 and 5.7 forgings are to be supplied in one of the following conditions:

(a) Carbon and carbon-manganese steels

Fully annealed
Normalized
Normalized and tempered
Quenched and tempered

(b) Alloy steels

Normalized
Normalized and tempered
Quenched and tempered

For all types of steel the tempering temperature is to be not less than 550°C.

The delivery condition shall meet the design and application requirements, it is the manufacturers responsibility to select the appropriate heat treatment method to obtain the required mechanical properties. Where forgings for gearing are not intended for surface hardening, lower tempering temperature may be allowed.

5.3 Heat treatment is to be carried out in properly constructed furnaces which are efficiently maintained and have adequate means for control and recording of temperature. The furnace dimensions are to be such as to allow the whole furnace charge to be uniformly heated to the necessary temperature. In the case of very large forgings alternative methods of heat treatment will be specially considered by the Classification Society.

Sufficient thermocouples are to be connected to the furnace charge to measure and record that its temperature is adequately uniform unless the temperature uniformity of the furnace is verified at regular intervals.

5.4 If for any reasons a forging is subsequently heated for further hot working the forging is to be reheat treated.

5.5 Where it is intended to surface harden forgings, full details of the proposed procedure and specification are to be submitted for the approval of the Classification Society. For the purposes of this approval, the manufacture may be required to demonstrate by test that the proposed procedure gives a uniform surface layer of the required hardness and depth and that it does not impair the soundness and properties of the steel.

5.6 Where induction hardening or nitriding is to be carried out, forgings are to be heat treated at an appropriate stage to a condition suitable for this subsequent surface hardening.

5.7 Where carburizing is to be carried out, forgings are to be heat treated at an appropriate stage (generally either by full annealing or by normalizing and tempering) to a condition suitable for subsequent machining and carburizing.

5.8 If a forging is locally reheated or any straightening operation is performed after the final heat treatment consideration is to be given to a subsequent stress relieving heat treatment. The manufacturer shall have strict control of this temperature in order to avoid any detrimental effects to the final heat treatment and resultant microstructure and mechanical properties of the forging.

5.9 The forge is to maintain records of heat treatment identifying the furnace used, furnace charge, date, temperature and time at temperature. The records are to be presented to the surveyor on request.

6 Mechanical tests

6.1 Test material, sufficient for the required tests and for possible retest purposes, is to be provided with a cross-sectional area of not less than that part of the forging which it represents. This test material is to be integral with each forging except as provided in 6.8 and 6.11. Where batch testing is permitted according to 6.11, the test material may alternatively be a production part or separately forged. Separately forged test material is to have a reduction ratio similar to that used for the forgings represented.

6.2 For the purpose of these requirements a set of tests is to consist of one tensile test specimen and, when required, three Charpy V-notch impact test specimens.

6.3 Test specimens are normally to be cut with their axes either mainly parallel (longitudinal test) or mainly tangential (tangential test) to the principal axial direction of each product.

6.4 The test specimen shall be positioned as follows:

a) For forgings having a thickness, t, or diameter D up to maximum 50mm, the longitudinal axis of the test specimen is to be located at a distance of t/2 or D/2 below the heat treated surfaces.

b) For forgings having a thickness, t, or diameter D greater than 50mm, the longitudinal axis of the test specimen is to be located at a distance of t/4 or D/4 (mid-radius) or 80mm, whichever is less, below any heat treated surface. Test specimen is to be located with its longitudinal axis at a distance from any heat treated surface as shown in Fig. 1.

c) For ring and disc forgings (noting that the test specimen locations for these shaped forgings may be different to elongated or free form forgings), tangential sample shall be taken at t/2 for thickness ≤ 25mm and 12.5mm below the surface for thickness >25mm, in both the vertical and horizontal direction.

Where achievable, for thickness >25mm, no part of the test material shall be closer than 12.5 mm to any heat treated surface, as shown in Fig. 1.

W7
(cont)

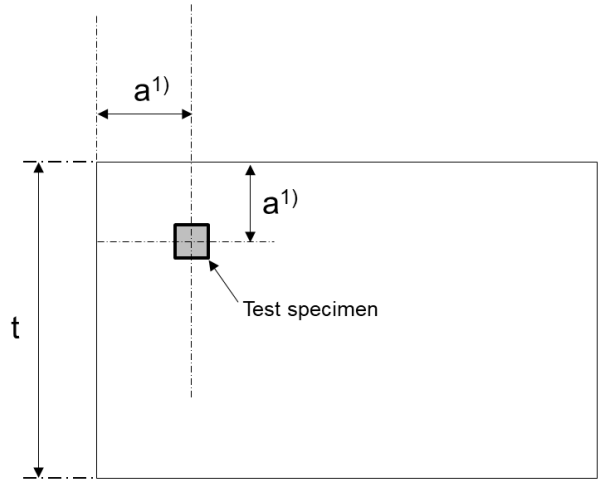

1) "a" is the distance from the test specimen to heat treated surface based on the above b) or c).

Fig.1 Position of the test specimen

6.5 Where the manufacturer can demonstrate that a proposed testing location or orientation is more representative of the required mechanical properties of a component, this may be agreed with the Classification Society. In such cases, the heat treatment process, a proposed testing location or orientation, and technical justification shall be submitted to the Classification Society for approval.

6.6 Except as provided in 6.11 the number and direction of tests is to be as follows.

(a) Hull components such as rudder stocks, pintles etc. General machinery components such as shafting, connecting rods, etc.

One set of tests is to be taken from the end of each forging in a longitudinal direction except that, at the discretion of the manufacture, the alternative directions or positions as shown in Fig. 2, 3 and 4 may be used. Where a forging exceeds both 4 tonnes in mass and 3m in length, one set of tests is to be taken from each end. These limits refer to the 'as forged' mass and length but excluding the test material.

(b) Pinions

Where the finished machined diameter of the toothed portion exceeds 200mm one set of tests is to be taken from each forging in a tangential direction adjacent to the toothed portion (test position B in Fig. 5). Where the dimensions preclude the preparation of tests from this position, tests in a tangential direction are to be taken from the end of the journal (test position C in Fig. 5). If however, the journal diameter is 200mm or less the tests are to be taken in a longitudinal direction (test position A in Fig. 5). Where the finished length of the toothed portion exceed 1.25m, one set of tests is to be taken from each end.

(c) Small pinions

Where the finished diameter of the toothed portion is 200mm or less one set of tests is to be taken in a longitudinal direction (test position A in Fig. 5).

(d) Gear wheels

One set of tests is to be taken from each forging in a tangential direction (test position A or B in Fig. 6).

W7 (cont)

(e) Gear wheel rims (made by expanding)

One set of tests is to be taken from each forging in a tangential direction (test position A or B in Fig. 7). Where the finished diameter exceeds 2.5m or the mass (as heat treated including test material) exceeds 3 tonnes, two sets of tests are to be taken from diametrically opposite positions (test positions A and B in Fig. 7). The mechanical properties for longitudinal test are to be applied.

(f) Pinion sleeves

One set of tests is to be taken from each forging in a tangential direction (test position A or B in Fig. 8). Where the finished length exceeds 1.25m one set of tests is to be taken from each end.

(g) Crankwebs

One set of tests is to be taken from each forging in a tangential direction.

(h) Solid open die forged crankshafts

One set of tests is to be taken in a longitudinal direction from the driving shaft end of each forging (test position A in Fig. 9).
Where the mass (as heat treated but excluding test material) exceeds 3 tonnes tests in a longitudinal direction are to be taken from each end (test positions A and B in Fig. 9). Where, however, the crankthrows are formed by machining or flame cutting, the second set of tests is to be taken in a tangential direction from material removed from the crankthrow at the end opposite the driving shaft end (test position C in Fig. 9).

(i) Forged Rings (such as slewing rings)

One set of tests is to be taken from each forging in a tangential direction (test positions are shown in Fig. 10). Where the finished diameter exceeds 2.5m or the mass (as heat treated, including test material) exceeds 3 tonnes then two sets of tests are to be taken diametrically opposite positions.

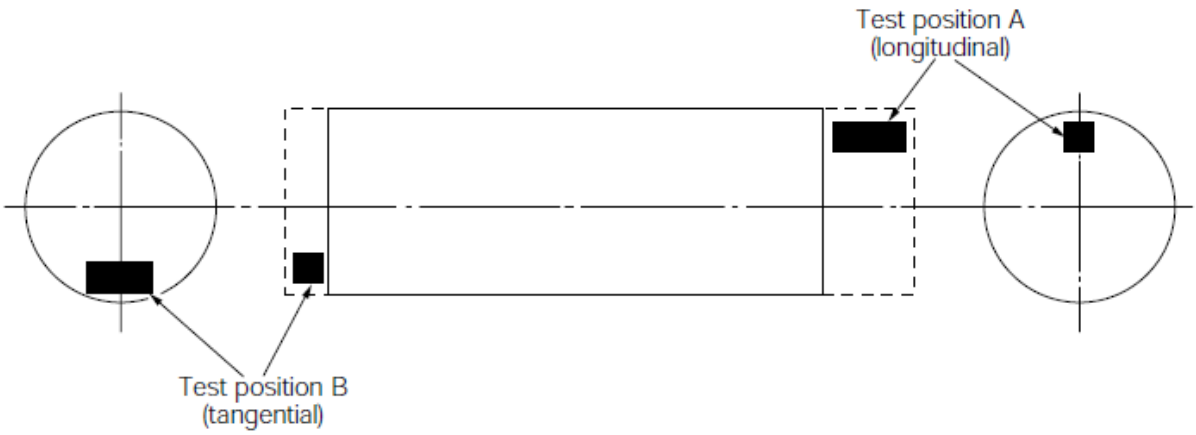

Fig. 2 Plain shaft

W7
(cont)

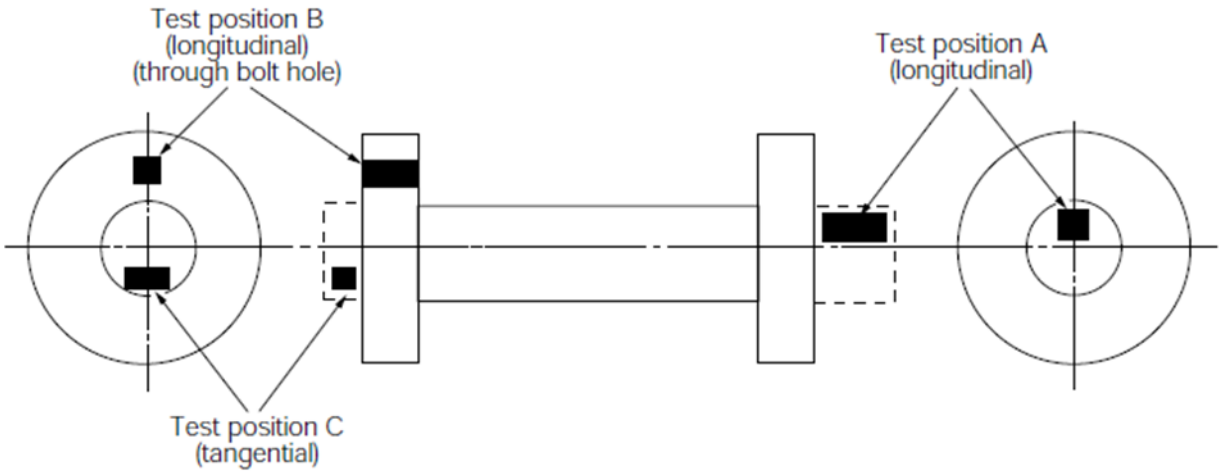

Fig. 3 Flanged shaft

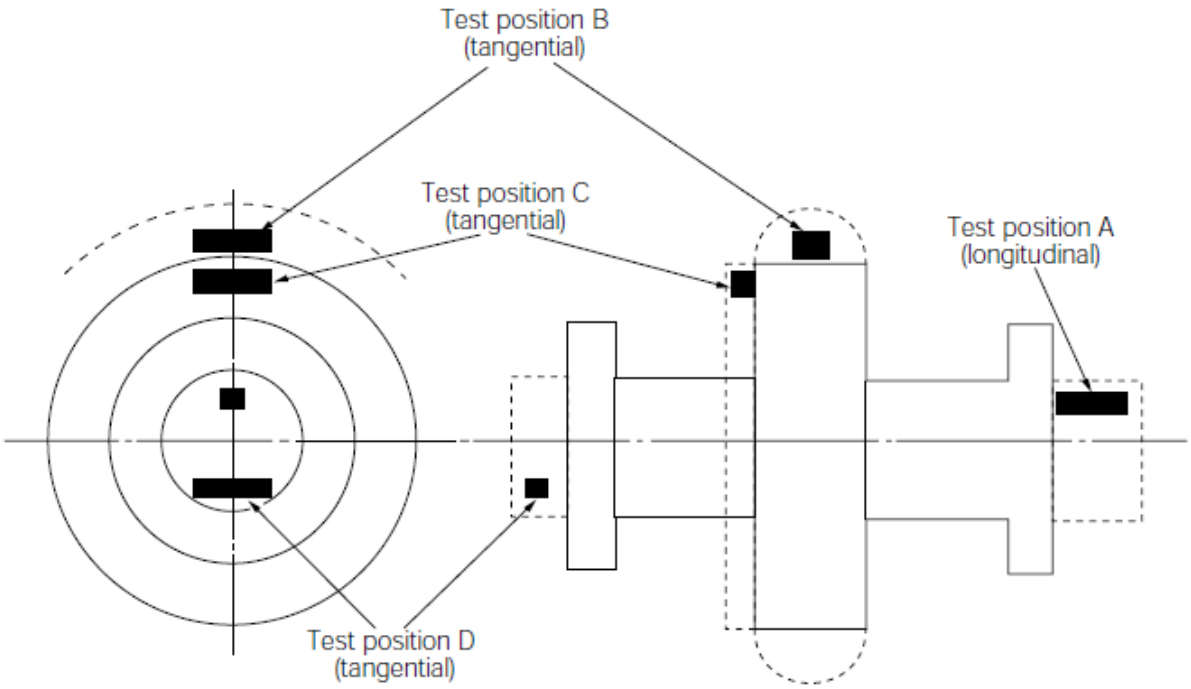

Fig. 4 Flanged shaft with collar

6.7 For closed die crankshaft forgings and crankshaft forgings where the method of manufacture has been specially approved in accordance with 2.5, the number and position of test specimens is to be agreed with the Classification Society having regard to the method of manufacture employed.

6.8 When a forging is subsequently divided into a number of components, all of which are heat treated together in the same furnace charge, for test purposes this may be regarded as one forging and the number of tests required is to be related to the total length and mass of the original multiple forging.

6.9 Except for components which are to be carburized or for hollow forgings where the ends are to be subsequently closed, test material is not to be cut from a forging until all heat treatment has been completed.

W7
(cont)

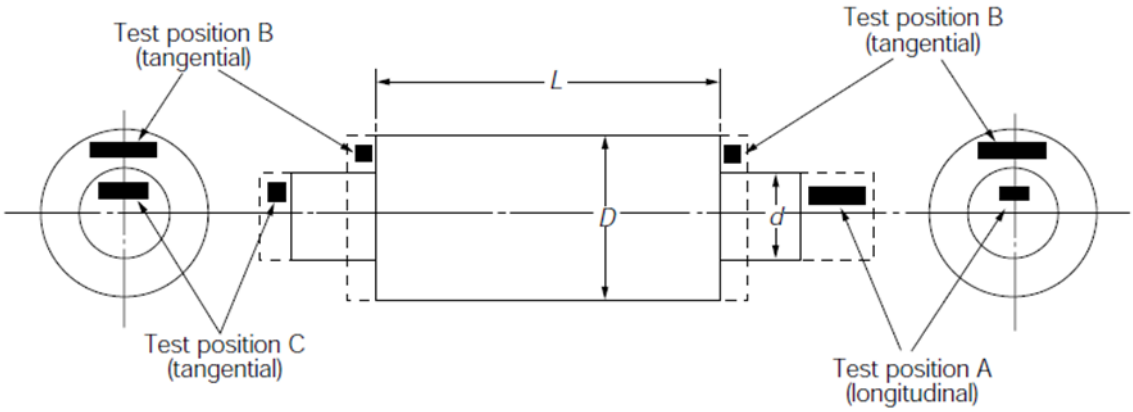

L = length of toothed portion
D = diameter of toothed portion
d = journal diameter

Fig. 5 Pinion

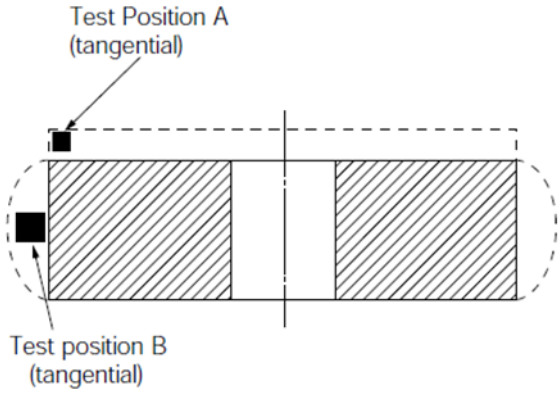

Fig. 6 Gear wheel

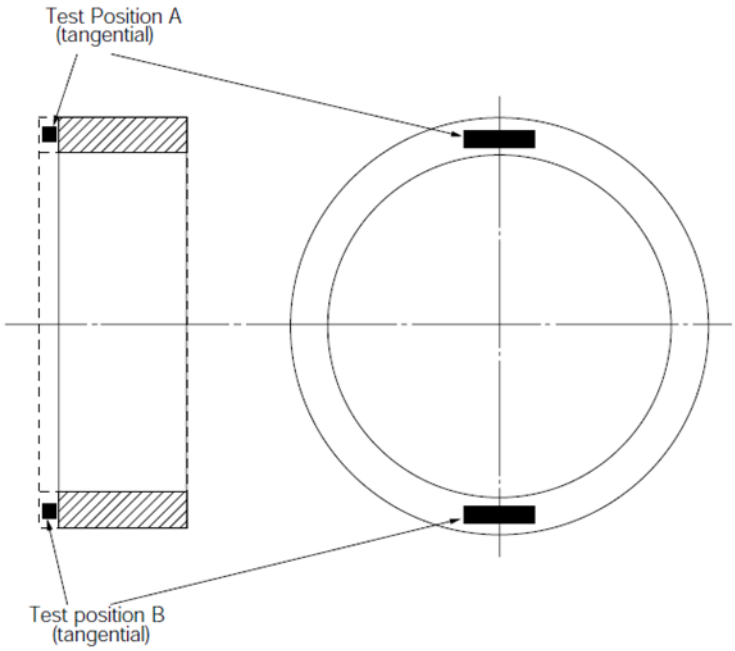

Fig. 7 Gear rim (made by expanding)

W7
(cont)

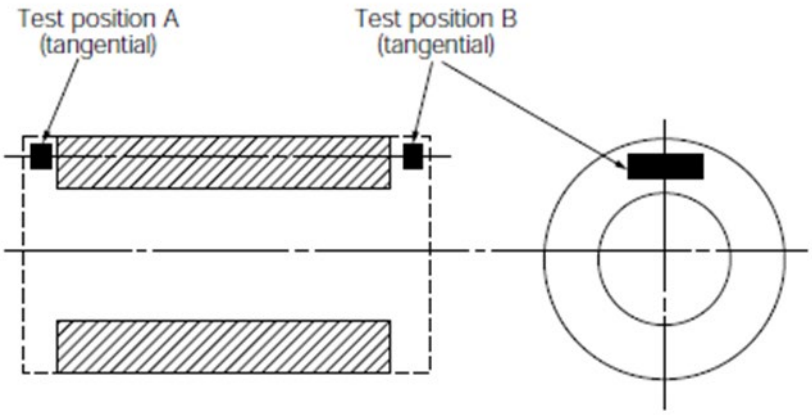

Fig. 8 Pinion sleeve

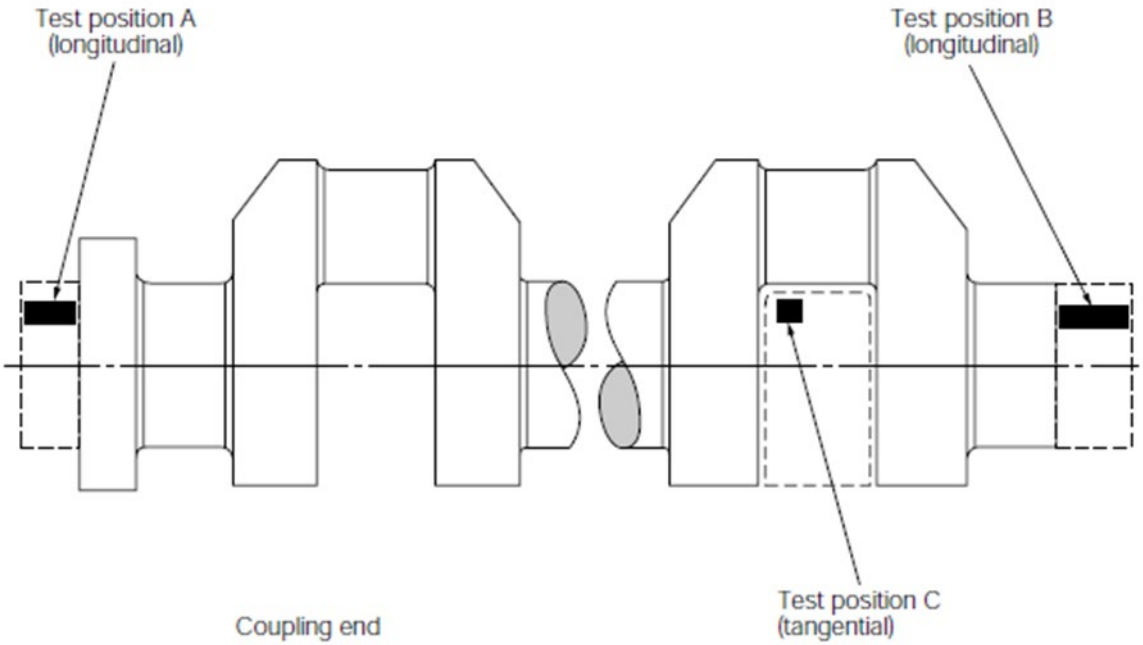

Fig. 9 Solid forged crankshaft

W7
(cont)

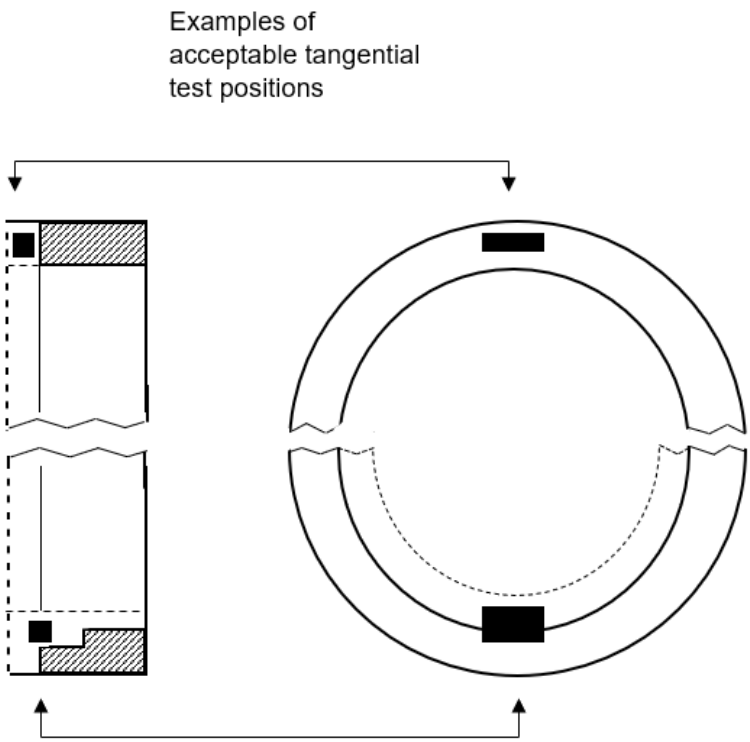

Fig. 10 Forged rings

6.10 When forgings are to be carburized, sufficient test material is to be provided for both preliminary tests at the forge and for final tests after completion of carburizing.

For this purpose duplicate sets of test material are to be taken from positions as detailed in 6.6, except that irrespective of the dimensions or mass of the forging, tests are required from one position only and, in the case of forgings with integral journals, are to be cut in a longitudinal direction.

This test material is to be machined to a diameter of D/4 or 60mm, whichever is less, where D is the finished diameter of the toothed portion.

For preliminary tests at the forge one set of test material is to be given a blank carburizing and heat treatment cycle simulating that which subsequently will be applied to the forging. For final acceptance tests, the second set of test material is to be blank carburized and heat treated along with the forgings which they represent.

At the discretion of the forgemaster or gear manufacture test samples of larger cross section may be either carburized or blank carburized, but these are to be machined to the required diameter prior to the final quenching and tempering heat treatment.

Alternative procedures for testing of forgings which are to be carburized may be specially agreed with the Classification Society.

6.11 Normalized forgings with mass up to 1000kg each and quenched and tempered forgings with mass up to 500kg each may be batch tested. A batch is to consist of forgings of similar shape and dimensions, made from the same heat of steel, heat treated in the same furnace charge and with a total mass not exceeding 6 tonnes for normalized forgings and 3 tonnes for quenched and tempered forgings, respectively.

W7 (cont)

6.12 A batch testing procedure may also be used for hot rolled bars. A batch is to consist of either:

(i) material from the same rolled ingot or bloom provided that where this is cut into individual lengths, these are all heat treated in the same furnace charge, or

(ii) bars of the same diameter and heat, heat treated in the same furnace charge and with a total mass not exceeding 2.5 tonnes.

6.13 The preparation of test specimens and the procedures used for mechanical testing are to comply with the relevant requirements of W2. Unless otherwise agreed all tests are to be carried out in the presence of the Surveyor.

7 Mechanical properties

7.1 Tables 3 and 4 give the minimum requirements for yield stress, elongation, reduction of area and impact test energy values corresponding to different strength levels but it is not intended that these should necessarily be regarded as specific grades. Where it is proposed to use a steel with a specified minimum tensile strength intermediate to those given, corresponding minimum values for the other properties may be obtained by interpolation.

7.2 Forgings may be supplied to any specified minimum tensile strength selected within the general limits detailed in Tables 3 or 4 but subject to any additional requirements of the relevant Unified Requirements.

7.3 The mechanical properties are to comply with the requirements of Tables 3 or 4 appropriate to the specified minimum tensile strength or, where applicable, the requirements of the approved specification.

7.4 At the discretion of individual Classification Societies hardness tests may be required on the following:

(i) Gear forgings after completion of heat treatment and prior to machining the gear teeth. The hardness is to be determined at four positions equally spaced around the circumference of the surface where teeth will subsequently be cut. Where the finished diameter of the toothed portion exceeds 2.5m, the above number of test positions is to be increased to eight. Where the width of a gear wheel rim forging exceeds 1.25m, the hardness is to be determined at eight positions at each end of the forging.

(ii) Small crankshaft and gear forgings which have been batch tested. In such cases at least one hardness test is to be carried out on each forging.

The results of hardness tests are to be reported and, for information purposes, typical Brinell hardness values are given in Table 4.

7.5 Hardness tests may also be required on forgings which have been induction hardened, nitrided or carburized. For gear forgings these tests are to be carried out on the teeth after, where applicable, they have been ground to the finished profile. The results of such tests are to comply with the approved specifications (see 5.5).

7.6 Re-test requirements for tensile tests are to be in accordance with UR W2.

7.7 Re-test requirements for Charpy impact tests are to be in accordance with UR W2.

W7 (cont)

7.8 The additional tests detailed in 7.6 and 7.7 are to be taken, preferably from material adjacent to the original tests, but alternatively from another test position or sample representative of the forging or batch of forgings.

7.9 At the option of the manufacturer, when a forging or a batch of forgings has failed to meet the test requirements, it may be reheat treated and re-submitted for acceptance tests.

Table 3 Mechanical properties for hull steel forgings

Steel type	Tensile strength [1] R_m min. N/mm^2	Yield stress R_e min. N/mm^2	Elongation A_5 min. %		Reduction of area Z min. %		Charpy V-notch impact test[2]		
			Long.	Tang.	Long.	Tang.	Test temperature (°C)	Minimum average energy (J)	
								Long.	Tang.
C and C-Mn	400	200	26	19	50	35	0	27	18
	440	220	24	18	50	35			
	480	240	22	16	45	30			
	520	260	21	15	45	30			
	560	280	20	14	40	27			
	600	300	18	13	40	27			
Alloy	550	350	20	14	50	35			
	600	400	18	13	50	35			
	650	450	17	12	50	35			

1) The following ranges for tensile strength may be additionally specified:

specified minimum tensile strength:	< 600 N/mm^2	≥ 600 N/mm^2
tensile strength range:	120 N/mm^2	150 N/mm^2

2) Special consideration may be given to alternative requirements for Charpy V-notch test, depending on design and application, and subject to agreement by Society.

W7
(cont)

Table 4 Mechanical properties for machinery steel forgings

Steel type	Tensile strength [1] R_m min. N/mm^2	Yield stress R_e min. N/mm^2	Elongation A_5 min. %		Reduction of area Z min. %		Hardness[3] (Brinell)	Charpy V-notch impact test[2), 4)]		
			Long.	Tang.	Long.	Tang.		Test temperature (°C)	Minimum average energy (J) Long.	Minimum average energy (J) Tang.
C and C-Mn	400	200	26	19	50	35	110-150	AT[5]	27	18
	440	220	24	18	50	35	125-160			
	480	240	22	16	45	30	135-175			
	520	260	21	15	45	30	150-185			
	560	280	20	14	40	27	160-200			
	600	300	18	13	40	27	175-215			
	640	320	17	12	40	27	185-230			
	680	340	16	12	35	24	200-240			
	720	360	15	11	35	24	210-250			
	760	380	14	10	35	24	225-265			
Alloy	600	360	18	14	50	35	175-215			
	700	420	16	12	45	30	205-245			
	800	480	14	10	40	27	235-275			
	900	630	13	9	40	27	260-320			
	1000	700	12	8	35	24	290-365			
	1100	770	11	7	35	24	320-385			

[1] The following ranges for tensile strength may be additionally specified:

specified minimum tensile strength:	< 900 N/mm^2	≥ 900 N/mm^2
tensile strength range:	150 N/mm^2	200 N/mm^2

[2] For materials used for machinery exposed to sea water temperature, such as propeller shafts and shaft bolts, intended for ships with ice class notation IA Super, IA, IB and IC, Charpy V-notch impact testing is to be carried out for all steel types at –10°C and the average energy value is to be minimum 20J (longitudinal test). One individual value may be less than the required average value provided that it is not less than 70% of this average value.

[3] The hardness values are typical and are given for information purposes only.

[4] Special consideration may be given to alternative requirements for Charpy V-notch test, depending on design and application, and subject to agreement by Society.

[5] AT refers to Ambient Temperature (i.e. 23°C±5°C), which is specified in ISO 148-1:2016.

8 Inspection

8.1 All forgings should be subjected to a 100% visual examination of all accessible surfaces by the manufacturer and made available to the Surveyor. Where applicable, this visual examination is to include the examination of internal surfaces and bores. Unless otherwise agreed, the verification of dimensions is the responsibility of the manufacturer.

8.2 When required by the relevant Unified Requirement, or by the approved procedure for welded composite components (see 2.7) appropriate non-destructive testing is also to be carried out before acceptance and the results are to be reported by the manufacturer.

8.3 Where required by the appropriate Unified Requirement or Recommendation 68, ultrasonic examination is to be carried out after the forgings have been machined to a condition suitable for this type of examination and after the final heat treatment. Both radial

W7
(cont)

and axial scanning are to be carried out where appropriate for the shape and the dimensions of the forgings being examined.

8.4 The method and the extent of inspection, NDT and acceptance criteria are to be agreed with the Classification Society. IACS Recommendation No. 68 is regarded as an example of an acceptable standard.
For mass produced forgings the extent of examination is to be established at the discretion of the individual Society.

8.5 Unless otherwise agreed, examinations are to be carried out by the manufacturer, although Surveyors may request to be present in order to verify that the examination is being carried out in accordance with the agreed procedure.

8.6 If the forging is supplied in the 'as forged' condition for machining at a separate works, the manufacturer is to ensure that a suitable ultrasonic examination is carried out to verify the internal quality of the forging.

8.7 Where advanced ultrasonic testing methods are applied, e.g. PAUT or TOFD, reference is made to UR W34 Advanced non-destructive testing of materials and welds –Dec. 2019, for general approach in adopting and application of these advanced methods.
In such cases, acceptance levels regarding accept/reject criteria may be as per the applicable section in the IACS Recommendation No. 68.

8.8 When required by the conditions of approval for surface hardened forgings (5.5 refers) additional test samples are to be processed at the same time as the forgings which they represent. These test samples are subsequently to be sectioned in order to determine the hardness, shape and depth of the locally hardened zone and which are to comply with the requirements of the approved specification.

8.9 In the event of any forging proving defective during subsequent machining or testing, it is to be rejected notwithstanding any previous certification.

9 Rectification of defective forgings

9.1 Defects may be removed by grinding or chipping and grinding provided the component dimensions are acceptable. The resulting grooves are to have a bottom radius of approximately three times the groove depth and are to be blended into the surrounding surface so as to avoid any sharp contours. Complete elimination of the defective material is to be verified by magnetic particle testing or liquid penetrant testing.

9.2 Repair welding of forgings except those subjected to torsional fatigue, such as crankshaft forgings and propeller shaft forgings, may be permitted subject to prior approval of the Classification Society. In such cases, full details of the extent and location of the repair, the proposed welding procedure, heat treatment and subsequent inspection procedures are to be submitted for the approval.

9.3 The forging manufacturer is to maintain records of repairs and subsequent inspections traceable to each forging repaired. The records are to be presented to the surveyor on request.

W7
(cont)

10 Identification of forgings

10.1 The manufacturer is to adopt a system of identification which will enable all finished forgings to be traced to the original cast and the Surveyor is to be given full facilities for so tracing the forgings when required.

10.2 Before acceptance, all forgings which have been tested and inspected with satisfactory results are to be clearly marked by the manufacturer. At the discretion of individual Classification Societies any of the following particulars may be required:

(i) Steel quality.
(ii) Identification number, cast number or other marking which will enable the full history of the forging to be traced.
(iii) Manufacturer's name or trade mark.
(iv) Test pressure where applicable.
(v) Date of final inspection.
(vi) The Classification Society's name, initials or symbol.
(vii) Abbreviated name of the Classification Society's local office.
(viii) Personal stamp of Surveyor responsible for inspection.

10.3 Where small forgings are manufactured in large numbers, modified arrangements for identification may be specially agreed with the Classification Society.

11 Certification

11.1 The manufacturer is to provide the required type of inspection certificate giving the following particulars for each forging or batch of forgings which has been accepted:

(i) Purchaser's name and order number.
(ii) Description of forgings and steel quality.
(iii) Identification number.
(iv) Steelmaking process, cast number and chemical analysis of ladle sample.
(v) Results of mechanical tests.
(vi) Results of non-destructive tests, where applicable.
(vii) Details of heat treatment, including temperature and holding times.

End of Document

W8 Hull and machinery steel castings

(1978)
(Rev.1 July 2002)
(Rev.2 May 2004)
(Rev.3 Mar 2022)

1 Scope

1.1 These requirements are applicable to C, C-Mn and alloy steel castings intended for hull and machinery applications for ships and offshore units for worldwide services as specified in the relevant IACS Unified requirements and/or requirements of the Classification Society. This Unified Requirement also makes consideration for grades that are intended for fabrication by welding, as well as grades not intended for welding.

1.2 Additional requirements may be necessary, especially when the castings are intended for service at low or elevated temperatures, e.g. for ships with ice-class or for boilers. Additional requirements will typically be required for castings for offshore units depending on applicable service temperature and environment.

1.3 Similarly, C and C-Mn steel castings and alloy steel castings which comply with national or proprietary specifications may be accepted provided such specifications give reasonable equivalence to these requirements or are otherwise specially approved or required by the Classification Society.

2 Manufacture

2.1 Castings are to be made at a manufacturer approved by the Classification Society.

2.2 The steel is to be manufactured by a process approved by the Classification Society.

2.3 All flame cutting, scarfing or arc-air gouging to remove surplus metal is to be undertaken in accordance with recognized good practice and is to be carried out before the final heat treatment. Preheating is to be employed when necessitated by the chemical composition and/or thickness of the castings. If necessary, the affected areas are to be either machined or ground smooth.

2.4 For certain components including steel castings subjected to surface hardening process, the proposed method of manufacture may require special approval by the Classification Society.

2.5 Joining of two or more castings by welding to form a composite component: Requirements for welding procedure qualification tests of steels for hull construction and marine structures are specified in UR W28. Welders for hull structural steel castings are to be qualified in accordance with UR W32. Requirements for other WPS and qualification thereof, for welder certification and for type approval of welding consumables are at the discretion of the Class Societies.

2.6 Temporary welds made for operations such as lifting, handling, staging, etc., are to be in accordance with approved welding procedures and qualified welders, and are to be removed, ground and inspected using suitable NDT methods.

Notes:

1. Rev.3 of this UR is to be uniformly implemented by IACS Societies for ships and offshore units contracted for construction on or after 1 July 2023.

W8
(cont)

3 Quality of castings

3.1 All castings are to be free from surface or internal defects, which would be prejudicial to their proper application in service. The surface finish is to be in accordance with good practice and any specific requirements of the approved plan.

4 Chemical composition

4.1 All castings are to be made from killed steel and the chemical composition is to be appropriate for the type of steel and the mechanical properties specified for the castings.

4.1 The chemical composition of each heat is to be determined by the manufacturer on a sample taken preferably during the pouring of the heat. When multiple heats are tapped into a common ladle, the ladle analysis shall apply.

4.2 The chemical composition is to comply with the overall limits given in Table 1 and Table 2, respectively, or, where applicable, the requirements of the approved specification.

Table 1 Chemical composition limits for hull and machinery steel castings (%): C, C-Mn steels

Steel type	Applications	C (max.)	Si (max.)	Mn	S (max.)	P (max.)	Residual elements (max.)				Total residuals (max.)
							Cu	Cr	Ni	Mo	
C, C-Mn	Castings for non-welded construction	0.40	0.60	0.50-1.60	0.035	0.035	0.30	0.30	0.40	0.15	0.80
	Castings for welded construction	0.23	0.60	0.50-1.60	0.035	0.035	0.30	0.30	0.40	0.15	0.80

Table 2 Chemical composition limits for hull and machinery steel castings (%): Alloy steels

Steel type	Applications	C (max.)	Si (max.)	Mn	S (max.)	P (max.)	Alloying elements[1)] (min.)			
							Cu	Cr	Ni	Mo
Alloy	Castings for non-welded construction	0.45	0.60	0.50-1.60	0.030	0.035	0.30	0.40	0.40	0.15
	Castings for welded construction	alloying element values to be agreed with Class Society								
[1)] At least one of the elements shall comply with the minimum content.										

4.3 Suitable grain refining elements such as aluminium may be used at the discretion of the manufacturer or as agreed with the Class Society.

5 Heat treatment (including straightening)

5.1 Castings are to be supplied in one of the following delivery conditions:

(a) Carbon and carbon-manganese steels:
- Fully annealed
- Normalized

- Normalized and tempered
- Quenched and tempered.

(b) Alloy steels:
- Normalized
- Normalized and tempered
- Quenched and tempered

For all types of steel the tempering temperature is to be not less than 550°C.

The delivery condition shall meet the design and application requirements. It is the manufacturers responsibility to select the appropriate heat treatment method to obtain the required mechanical properties.

5.2 Castings for components such as crankshafts and engine bedplates, where dimensional stability and freedom from internal stresses are important, are to be given a stress relief heat treatment. This is to be carried out at a temperature of not less than 550°C followed by furnace cooling to 300°C or lower.

5.3 Heat treatment is to be carried out in properly constructed furnaces which are efficiently maintained and have adequate means for control and recording of temperature. The furnace dimensions are to be such as to allow the whole casting to be uniformly heated to the necessary temperature. In the case of very large castings alternative methods for heat treatment will be specially considered by the Classification Society.
Sufficient thermocouples are to be connected to the furnace charge to measure and record that its temperature is adequately uniform unless the temperature uniformity of the furnace is verified at regular intervals.

5.4 If a casting is locally reheated or any straightening operation is performed after the final heat treatment, a subsequent stress relieving heat treatment may be required in order to avoid the possibility of harmful residual stresses. The manufacturer shall have strict control of this temperature in order to avoid any detrimental effects to the final heat treatment and resultant microstructure and mechanical properties of the casting.

5.5 The foundry is to maintain records of heat treatment identifying the furnace used, furnace charge, date, temperature and time at temperature. The records are to be presented to the Surveyor on request.

6 Mechanical tests

6.1 Test material, sufficient for the required tests and for possible retest purposes is to be provided for each casting or batch of castings.

6.2 At least one test block is to be provided for each casting. Unless otherwise agreed these test blocks are to be either integrally cast or gated to the castings.

6.3 The size of the test blocks for mechanical testing is to be such that the heat treatment and microstructure is representative for the section of the casting with the ruling section, i.e. the section for which the specified mechanical properties apply, see also ISO 683-1:2018 and ISO 683-2:2018, respectively.

For C, C-Mn steel castings this is in general to be achieved as follows:
The test block shall have a thickness (t_S) of not less than the ruling section of the casting, or 30 mm, whichever is larger.

W8 (cont)

For large thickness castings other than stern tube, stern frame, anchor and rudder horn, t_S normally need not to exceed 150 mm. Length and width of the test block is normally to be at least three times t_S, unless otherwise agreed with the Class Society, as shown in Figure 1. (Note that longer or wider test blocks may be necessary in order to accommodate the required test specimens.)
For castings for stern tube, stern frame, anchor and rudder horn the test block thickness t_S shall represent the ruling section.

Guidance:
Shorter width or length may be accepted for test blocks where actual casting width or length (t_A) is in the range between t_S and $3t_S$.

Example 1: For a general casting with dimensions 140 x 160 x 1250 mm the required test block size would typically be 140 x 160 x 420 mm (that is: t_S x t_A x $3t_S$).

Example 2: For a stern tube casting with ruling section t_S = 170 mm and width/height/length $t_{A1}/t_{A2}/t_{A3}$ = 1000/600/1800 mm, the required test block size would typically be 170 x 510 x 510 mm (that is: t_S x $3t_S$ x $3t_S$) see Figure 2.
(end of guidance)

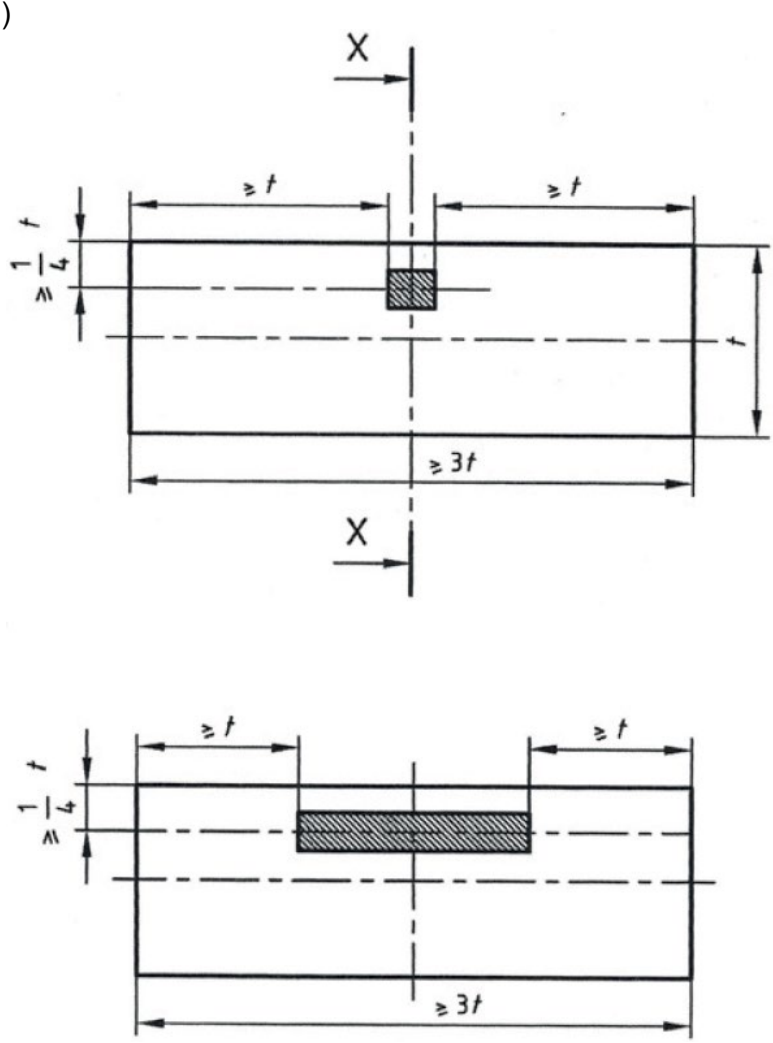

Fig. 1: Specimen positions relative to the test block in accordance with ISO 4990:2015*

* The figure taken from ISO 4990:2015, Steel castings — General technical delivery requirements, is reproduced with the permission of the International Organization for Standardization, ISO. This standard can be obtained from any ISO member and from the website of the ISO Central Secretariat at the following address: www.iso.org. Copyright remains with ISO.

W8
(cont)

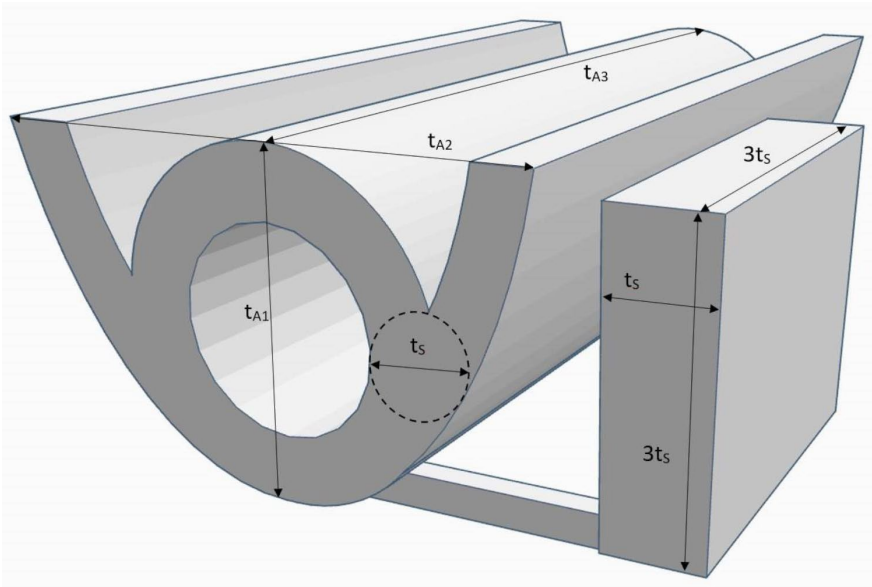

Fig. 2: Example 2: test block gated to stern tube casting

For alloy steel castings the manufacturer shall propose dimensions for the test block and demonstrate the representative nature of it.

6.4 For test blocks with thickness ≤ 56 mm, the longitudinal axis of the test specimens is to be located at ≥ 14 mm from the surface in the thickness direction. For test blocks with thickness > 56 mm, the longitudinal axis of the test specimens is to be located at ≥ ¼ t_S from the surface. Test specimens shall be taken in such a way that no part of the gauge length is machined from material closer than t_S to any of the other surfaces. For impact testing, this requirement shall apply to the complete test specimen - refer to Figure 1 for location of test specimens in relation to the test block.

6.5 Where the casting is of complex design or where the finished mass exceeds 10 tonnes, two cast on test blocks are to be provided from the heaviest section, located as far as practicable from each other.

6.6 Where large castings are made from two or more casts, which are not mixed in a ladle prior to pouring, two or more test blocks are to be provided corresponding to the number of casts involved. These are to be integrally cast at locations as widely separated as possible.

6.7 For castings where the method of manufacture has been specially approved by the Classification Society in accordance with W8.2.4, the number and position of test blocks is to be agreed with the Classification Society having regard to the method of manufacture employed.

6.8 As an alternative to 6.2, where a number of small castings of about the same size, each of which is under 1000kg in mass, are made from one cast and heat treated in the same furnace charge, a batch testing procedure may be adopted using separately cast test blocks of suitable dimensions. At least one test block is to be provided for each batch of castings.

6.9 The test blocks are not to be detached from the casting until the specified heat treatment has been completed and they have been properly identified.

6.10 One tensile test specimen and one set of impact tests are to be taken from each test block.

W8 (cont)

6.11 The preparation of test specimens and the procedures used for mechanical testing are to comply with the relevant requirements of UR W2. Unless otherwise agreed all tests are to be carried out in the presence of the Surveyors.

7 Mechanical properties

7.1 Table 3 and Table 4 give the minimum requirements for yield stress, elongation, reduction of area and impact test energy values corresponding to steel types and different strength levels. Where it is proposed to use a steel with a specified minimum tensile strength intermediate to those given, corresponding minimum values for the other properties may be obtained by interpolation.

7.2 Castings may be supplied to any specified minimum tensile strength selected within the general limits detailed in Table 3 and Table 4, respectively, but subject to any additional requirements of the relevant construction Rules.

7.3 The mechanical properties are to comply with the requirements of Table 3 and Table 4, respectively, appropriate to the specified minimum tensile strength or, where applicable, the requirements of the approved specification.

7.4 Re-test requirements for tensile tests are to be in accordance with UR W2.

7.5 The additional tests detailed in 7.4 are to be taken, preferably from the same, but alternatively from another, test block representative of the casting or batch of castings.

7.6 At the option of the manufacturer, when a casting or batch of castings has failed to meet the test requirements, it may be reheat treated and re-submitted for acceptance tests.

Table 3 Mechanical properties for steel castings intended for welding

Steel type	Specified minimum tensile strength[1] (N/mm^2)	Yield stress (N/mm^2) min.	Elongation on 5,65 √So (%) min.	Reduction of area (%) min.	Charpy V-notch impact	
					Test temperature (°C)	Minimum average energy (J)
C, C-Mn	400	200	25	40	0	27
	440	220	22	30		
	480	240	20	27		
	520	260	18	25		
	560	300	15	20		
	600	320	13	20		
Alloy	550	355	18	30	0	27
	600	400	16	30		
	650	450	14	30		
	700	540	12	28		

NOTE

[1] A tensile strength range of 150 N/mm^2 may additionally be specified.

[2] Special consideration may be given to alternative requirements for Charpy V-notch impact test, depending on design and application, and subject to agreement by Society.

W8
(cont)

Table 4. Mechanical properties for machinery steel castings not intended for welding

Steel type	Specified minimum tensile strength[1] (N/mm^2)	Yield stress (N/mm^2) min.	Elongation on 5,65 √So (%) min.	Reduction of area (%) min.	Charpy V-notch impact test[2]	
					Test temperature (°C)	Minimum average energy (J)
C, C-Mn	400 440 480 520 560 600	200 220 240 260 300 320	25 22 20 18 15 13	40 30 27 25 20 20	AT[3]	27
Alloy	550	340	16	35	AT[3]	27
	600	400	16	35		
	650	450	14	32		
	700	540	12	28		

NOTE
[1] A tensile strength range of 150 N/mm^2 may additionally be specified.
[2] Special consideration may be given to alternative requirements for Charpy V-notch impact test, depending on design and application, and subject to agreement by Society.
[3] AT refers to Ambient Temperature (i.e. 23°C±5°C), which is specified in ISO 148-1:2016

8 Inspection

8.1 All castings are to be cleaned and adequately prepared for examination; suitable methods include pickling, caustic cleaning, wire brushing, local grinding, shot or sand blasting. The surfaces are not to be hammered, peened or treated in any way which may obscure defects.

8.2 Before acceptance all castings are to be presented to the Surveyors for visual examination. Where applicable, this is to include the examination of internal surfaces. Unless otherwise agreed, the verification of dimensions is the responsibility of the manufacturer.

8.3 When required by the relevant construction Rules, or by the approved procedure for welded composite components (see W8.2.6.), appropriate non-destructive testing is also to be carried out before acceptance and the results are to be reported by the manufacturer. The extent of testing and acceptance criteria are to be agreed with the Classification Society. IACS Recommendation No. 69 is regarded as an example of an acceptable standard specifying suitable minimum requirements.

8.4 When required by the relevant construction Rules castings are to be pressure tested before final acceptance. These tests are to be carried out in the presence of the Surveyor and are to be to their satisfaction.

8.5 In the event of any casting proving to be defective during subsequent machining or testing it is to be rejected notwithstanding any previous certification.

W8
(cont)

9 Rectification of defective castings

9.1 General

(i) Where castings are to be repaired, the manufacturer shall exercise robust controls of all repair operations regarding the repair of castings, with respect to dimensions, heat treatment, inspection and quality control.

(ii) The approval of the Classification Society is to be obtained where steel castings from which defects were removed are to be used with or without weld repair.

(iii) Defects and unacceptable indications must be repaired as indicated below:
Defective parts of material may be removed by grinding, or by chipping and grinding, or by arc air-gouging and grinding. Thermal methods of metal removal shall only be allowed before the final heat treatment. All grooves shall have a bottom radius of approximately three times the groove depth and should be smoothly blended to the surface area with a finish equal to that of the adjacent surface.

(iv) For NDT of steel castings after repair, see 8.3.

(v) Where the defective area is to be repaired by welding, the excavations are to be suitably shaped to allow good access for welding. The resulting grooves are to be subsequently ground smooth and complete elimination of the defective material is to be verified by MT or PT.

(vi) Shallow grooves or depressions resulting from the removal of defects may be accepted provided that they will cause no appreciable reduction in the strength of the casting or affect the intended use, and the depth of defect removal is not over 15mm or 10% of wall thickness, whichever is less. The resulting grooves or depressions are to be subsequently ground smooth and complete elimination of the defective material is to be verified by MT or PT. Small surface irregularities sealed by welding are to be treated as weld repairs, see 9.2.

9.2 Weld Repairs

In addition to the requirements given in 9.1, the following apply for weld repairs:

(i) For C and C-Mn steel castings weld repairs shall be suitably classified as major or minor. For alloy steel castings, repair requires approval from the Classification Society.

a. Major repairs are those where:
- the depth is greater than 25% of the wall thickness or 25mm whichever is less, or
- the total weld area on a casting exceeds 0.125m^2 of the casting surface noting that where a distance between two welds is less than their average width, they are to be considered as one weld.

b. Minor weld repairs: Weld repairs not classified as major are considered as minor and need to be carried out in accordance with a qualified welding procedure.

(ii) The following is required for major repairs:

a. Shall be carried out before the final delivery heat treatment condition

b. Shall comply with the requirements in (iv) below

W8 (cont)

c. Before welding is started, full details of the extent and location of the repair, the proposed welding procedure, heat treatment and subsequent inspection procedures are to be submitted for approval.

(iii) The following is required for minor repairs:

a. Shall be carried out before the final delivery heat treatment condition

b. Shall comply with the requirements in (iv) below (also with respect to records, see (iv) f) and g).

c. With the exception of alloy steels, do not require prior approval by the Classification Society, except as given in (d)

d. The Classification Society may request minor repairs in critical areas to be treated as major repairs.

(iv) The following requirements apply for all weld repairs (major and minor):

a. All castings in alloy steels and all castings for crankshafts are to be suitably pre-heated prior to welding. Castings in carbon or carbon-manganese steel may also require to be pre-heated depending on their chemical composition and the dimensions and position of the weld repairs.

b. Welding procedures are to be qualified and shall match the delivery condition of the casting. Qualification of welding procedures shall follow the Classification Society rules, or subject to agreement with the Classification Society, a recognised standard (e.g. IACS UR W28 or ISO 11970:2016.

c. Welding is to be done under cover in positions free from draughts and adverse weather conditions by qualified welders with adequate supervision. As far as possible, all welding is to be carried out in the downhand (flat) position.

d. The welding consumables used are to be of an appropriate composition, giving a weld deposit with mechanical properties similar and in no way inferior to those of the parent castings. Welding procedure tests are to be carried out by the manufacturer to demonstrate that satisfactory mechanical properties can be obtained after heat treatment as detailed in 5.1.

e. After welding has been completed the castings are to be given either a suitable heat treatment in accordance with the requirements of 5.1 or a stress relieving heat treatment at a temperature of not less than 550°C for C and C-Mn steel castings. For alloy steel castings, the heat treatment has to be agreed with the Class Society. The type of heat treatment employed will be dependent on the chemical composition of the casting and the dimensions, positions and nature of the repairs, and should not affect the properties of the casting.

Subject to the prior agreement of Classification Society, special consideration may be given to the omission of post weld heat treatment or to the acceptance of local stress-relieving heat treatment where the repaired area is small and machining of the casting has reached an advanced stage.

f. On completion of heat treatment the weld repairs and adjacent material are to be ground smooth and examined by magnetic particle or liquid penetrant testing. Supplementary examination by ultrasonics or radiography ultrasonic or

radiographic testing may also be required depending on the dimensions and nature of the original defect. Satisfactory results are to be obtained from all forms of non-destructive testing used.

g. The manufacturer is to maintain full records detailing the extent and location of repairs made to each casting and details of weld procedures and heat treatments applied for repairs. These records are to be available to the Surveyor and copies provided on request.

9.3 Recommendation for welding: For steels with C ≥ 0.23 or Ceq ≥ 0.45, the WPQT on which the WPS is based, should be qualified on a base material having a Ceq as follows: the Ceq of the base material should not fall below more than 0.02 of the material to be welded. (Example: WPQT for a material with actual Ceq = 0.50 may be qualified on a material with Ceq ≥ 0.48.)

10 Identification of castings

10.1 The manufacturer is to adopt a system of identification which will enable all finished castings to be traced to the original cast and the Surveyors are to be given full facilities for so tracing the castings when required.

10.2 Before acceptance, all castings which have been tested and inspected with satisfactory results are to be clearly marked by the manufacturer. At the discretion of individual Classification Societies any of the following particulars may be required:

(i) Steel quality.
(ii) Identification number, cast number or other marking which will enable the full history of the casting to be traced.
(iii) Manufacturer's name or trade mark.
(iv) The Classification Society's name, initials or symbol.
(v) Abbreviated name of the Classification Society's local office.
(vi) Personal stamp of Surveyors responsible for inspection.
(vii) Where applicable, test pressure.

10.3 Where small castings are manufactured in large numbers, modified arrangements for identification may be specially agreed with the Classification Society.

11 Certification

11.1 The manufacturer is to provide the required type of inspection certificate giving the following particulars for each casting or batch of castings which has been accepted:

(i) Purchaser's name and order number.
(ii) Description of castings and steel quality.
(iii) Identification number.
(iv) Steel making process, cast number and chemical analysis of ladle samples.
(v) Results of mechanical tests.
(vi) Results of non-destructive tests, where applicable.
(vii) Details of heat treatment, including temperatures and holding times.
(viii) Where applicable, test pressure.

End of Document

W9 Grey iron castings

(1978)
(Rev. 1 1995)
(Rev.2 May 2004)

W9.1 Scope
(1978)

W9.1.1 All major grey iron castings, as defined in the relevant construction Rules, are as be manufactured and tested in accordance with the requirements of the following paragraphs.

W9.1.2 Alternatively, castings which comply with national or proprietary specifications may be accepted provided such specifications give reasonable equivalence to these requirements or otherwise are specially approved or required by the Classification Society.

W9.1.3 Where small castings are produced in large quantities, the manufacturer may adopt alternative procedures for testing and inspection subject to the approval of the Classification Society.

W9.2 Manufacture
(1978)

W9.2.1 All major castings are to be made at foundries where the manufacturer has demonstrated to the satisfaction of the Classification Society that the necessary manufacturing and testing facilities are available and are supervised by qualified personnel. A programme of approval tests may be required in accordance with the procedures of individual Classification Societies.

W9.2.2 Suitable mechanical methods are to be employed for the removal of surplus material from castings. Thermal cutting processes are not acceptable, except as a preliminary operation to mechanical methods.

W9.2.3 Where castings of the same type are regularly produced in quantity, the manufacturer is to make any tests necessary to prove the quality of the prototype castings and is also to make periodical examinations to verify the continued efficiency of the manufacturing technique. The Surveyor is to be given the opportunity to witness these tests.

W9.3 Quality of castings
(1978)

W9.3.1 Castings are to be free from surface or internal defects which would be prejudicial to their proper application in service. The surface finish is to be in accordance with good practice and any specific requirements of the approved plan.

W9.4 Chemical composition
(1978)

W9.4.1 The chemical composition of the iron used is left to the discretion of the manufacturer, who is to ensure that it is suitable to obtain the mechanical properties specified for the castings. When required by individual Classification Societies the chemical composition of ladle samples is to be reported.

W9.5 Heat treatment
(1978)

W9.5.1 Except as required by W9.5.2 castings may be supplied in either the as cast or heat treated condition.

W9.5.2 For some applications, such as high temperature service or where dimensional stability is important, castings may require to be given a suitable tempering or stress relieving heat treatment.

W9.6 Mechanical tests
(Rev.2 May 2004)

W9.6.1 Test material sufficient for the required tests and for possible re-tests is to be provided for each casting or batch of castings.

W9.6.2 Separately cast test samples are to be used unless otherwise agreed between the manufacturer and purchaser and generally are to be in the form of bars 30 mm in diamter and of a sutiable length. They are to be cast from the same ladle as the castings in moulds of the same type of material as the moulds for the castings and are not to be stripped from the moulds until the metal temperature is below 500°C. When two or more test samples are cast simultaneously in a single mould, the bars are to be at ▶

least 50 mm apart as given in Fig. 1.

W9.6.3 Integrally cast samples may be used when a casting is mor ethan 20 mm thick and its mass exceeds 200 Kg, subject to agreement between the manufacturer and the purchaser. The type and location of the sample are to be selected to provide approximately the same cooling conditions as for the casting it represents and also subject to agreement.

W9.6.4 With the exception of 9.6.7, at least one test sample is to be cast with each batch.

W9.6.5 With the exception of 9.6.6, a batch consists of the castings poured from a single ladle of metal, provided that they are all of similar type and dimensions. A batch should not normally exceed two tonnes of fettled castings and a single casting will constitute a batch is its mass is 2 tonnes or more.

W9.6.6 For continuous melting of the same grade of cast iron in large tonnages the mass of a batch may be increased to the output of 2 hours of pouring.

W9.6.7 If one grade of cast iron is melted in large quantities and if production is carefully monitored by systematic checking of the melting process, such as chill testing, chemical analysis or thermal analysis, test samples may be taken at longer intervals.

W9.6.8 All test samples are to be suitably marked to identify them with the castings which they represent.

W9.6.9 Where castings are supplied in the heat treated condition, the test samples are to be heat treated together with the castings which they represent. For cast-on-test samples the sample shall not be cut off from the casting until after the heat treatment.

W9.6.10 One tensile test specimen is to be prepared from each test sample and for 30mm diameter samples is to be machined to the dimensions given inW.2.4. Where test samples of other dimensions are specially required the tensile test specimens are to be machined to agreed dimensions.

W9.6.11 All tensile tests are to be carried out using test procedures in accordance with W2. Unless otherwise agreed all tests are to be carried out in the presence of the Surveyors.

9.7 Mechanical Properties
(Rev.2 May 2004)

W9.7.1 Only the tensile strength is to be determined and the results obtained from tests are to comply with the minimum value specified for the castings being supplied. The value selected for the specified minimum tensile strength is to be not less than 200 N/mm^2 but subject to any additional requirements of the relevant construction Rules. The fractured surfaces of all tensile test specimens are to be granular and grey in appearance.

W9.7.2 Re-test requirements for tensile tests are to be in accordance with UR W2.

9.8 Inspection
(1978)

W9.8.1 All castings are to be cleaned and adequately prepared for examination. The surfaces are not to be hammered, peened or treated in any way which may obscure defects.

W9.8.2 Before acceptance, all castings are to be visually examined including, where applicable, the examination of internal surfaces. Unless otherwise agreed, the verification of dimensions is the responsibility of the manufacturer.

W9.8.3 Supplementary examination of castings by suitable nondestructive testing procedures is generally not required except in circumstances where there is reason to suspect the soundness of the casting.

W9.8.4 When required by the relevant construction Rules, castings are to be pressure tested before final acceptance.

W9.8.5 In the event of any casting proving defective during subsequent machining or testing it is to be rejected notwithstanding any previous certification.

W9.9 Rectification of defective castings
(1978)

W9.9.1 At the discretion of the Surveyor, small surface blemishes may be removed by local grinding.

W9.9.2 Subject to the prior approval of the Surveyor, castings containing local porosity may be rectified by impregnation with a suitable plastic filler, provided that the extent of the porosity is such that it does not adversely affect the strength of the casting.

▶

W9
cont'd

W9.9.3 Repairs by welding are generally not permitted.

W9.10 Identification of castings
(Rev. 1995)

W9.10.1 The manufacturer is to adopt a system of identification, which will enable all finished castings to be traced to the original ladle of metal. The Surveyor is to be given full facilities for so tracing the castings when required.

W9.10.2 Before acceptance, all castings which have been tested and inspected with satisfactory results are to be clearly marked by the manufacturer. At the discretion of individual Classification Societies any of the following particulars may be required:
(i) Quality of cast iron.
(ii) Identification number or other marking which will enable the full history of the casting to be traced.
(iii) Manufacturer's name or trade mark.
(iv) The Classification Society's name, initials or symbol.
(v) Abbreviated name of the Classification Society's local office.
(vi) Personal stamp of Surveyor responsible for inspection.
(vii) Where applicable, test pressure.
(viii) Date of final inspection

W9.10.3 Where small castings are manufactured in large numbers, modified arrangements for identification may be specially agreed with the Classification Society.

W9.11 Certification
(1978)

W9.11.1 The manufacturer is to provide the Surveyor with a test certificate or shipping statement giving the following particulars for each casting or batch of castings which has been accepted:
(i) Purchaser's name and order number.
(ii) Description of castings and quality of cast iron.
(iii) Identification number.
(iv) Results of mechanical tests.
(v) Where applicable, general details of heat treatment.
(vi) When specially required, the chemical analysis of ladle samples.
(vii) Where applicable, test pressure.

Fig.1
Test Sample for grey cast iron

Dimensions in millimeters

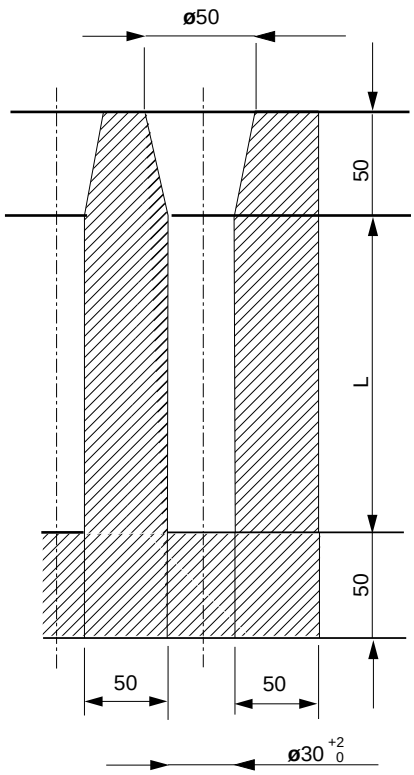

W10 Spheroidal or nodular graphite iron castings

(1978)
(Rev. 1 1995)
(Rev.2 May 2004)

W10.1 Scope
(1978)

W10.1.1 All important spheroidal or nodular graphite iron castings, as defined in the relevant construction Rules, are to be manufactured and tested in accordance with the requirements of the following paragraphs.

W10.1.2 These requirements are applicable only to castings where the design and acceptance tests are related to mechanical properties at ambient temperature. For other applications additional requirements may be necessary, especially when the castings are intended for service at low or elevated temperatures.

W10.1.3 Alternatively, castings which comply with national or proprietary specifications may be accepted provided such specifications give reasonable equivalence to these requirements or otherwise are specially approved or required by the Classification Society.

W10.1.4 Where small castings are produced in large quantities the manufacturer may adopt alternative procedures for testing and inspection subject to the approval of the Classification Society.

W10.2 Manufacture
(1978)

W10.2.1 All important castings are to be made at foundries where the manufacturer has demonstrated to the satisfaction of the Classification Society that the necessary manufacturing and testing facilities are available and are supervised by qualified personnel. A programme of approval tests may be required in accordance with the procedures of individual Classification Societies.

W10.2.2 Suitable mechanical methods are to be employed for the removal of surplus material from castings. Thermal cutting processes are not acceptable, except as a preliminary operation to mechanical methods.

W10.2.3 Where castings of the same type are regularly produced in quantity, the manufacturer is to make any tests necessary to prove the quality of the prototype castings and is also to make periodical examinations to verify the continued efficiency of the manufacturing technique. The Surveyor is to be given the opportunity to witness these tests.

W10
cont'd

W10.3 Quality of castings
(1978)

W10.3.1 Castings are to be free from surface or internal defects which would be prejudicial to their proper application in service. The surface finish is to be in accordance with good practice and any specific requirements of the approved plan.

W10.4 Chemical composition
(1978)

W10.4.1 Unless otherwise specially required, the chemical composition of the iron used is left to the discretion of the manufacturer, who is to ensure that it is suitable to obtain the mechanical properties specified for the castings. When required by individual Classification Societies the chemical composition of ladle samples is to be reported.

W10.5 Heat treatment
(Rev. 1995)

W10.5.1 Except as required by W10.5.2 castings may be supplied in either the as cast or heat treated condition.

W10.5.2 For some applications, such as high temperature service or where dimensional stability is important, it may be required that castings be given a suitable tempering or stress relieving heat treatment. This is to be carried out after any refining heat treatment and before machining. The special qualities with 350 N/mm^2 and 400 N/mm^2 nominal tensile strength and impact test shall undergo a ferritizing heat treatment.

W10.5.3 Where it is proposed to locally harden the surfaces of a casting full details of the proposed procedure and specification are to be submitted for approval by the Classification Society.

W10.6 Mechanical tests
(Rev.2 May 2004)

W10.6.1 Test material, sufficient for the required tests and for possible re-test purposes, is to be provided for each casting or batch of castings.

W10.6.2 The test samples are generally to be one of the standard types detailed in Figs. 1, 2 and 3 with a thickness of 25 mm. Test samples of other dimensions, as detailed in Figs. 1, 2 and 3 may, however, be specially required for some components.

W10.6.3 At least one test sample is to be provided for each casting and unless otherwise required may be either gated to the casting or separately cast. Alternatively test material of other suitable dimensions may be provided integral with the casting.

W10.6.4 For large castings where more than one ladle of treated metal is used, additional test samples are to be provided so as to be representative of each ladle used.

W10.6.5 As an alternative to W10.6.3, a batch testing procedure may be adopted for castings with a fettled mass of 1 tonne or less. All castings in a batch are to be of similar type and dimensions, cast from the same ladle of treated metal. One separately cast test sample is to be provided for each multiple of 2,0 tonnes of fettled castings in the batch.

▶

W10
cont'd

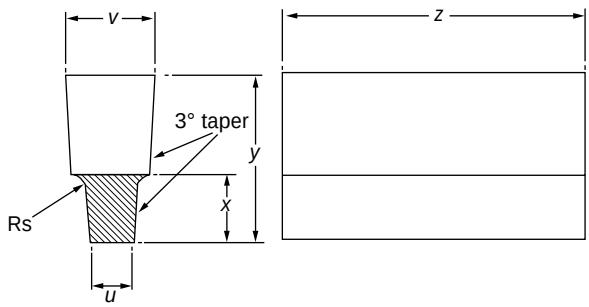

Fig. 1 Type A test samples (U-type)

Dimensions	Standard sample	Alternative samples when specially required		
u (mm)	25	12	50	75
v (mm)	55	40	90	125
x (mm)	40	30	60	65
y (mm)	100	80	150	165
z	To suit testing machine			
Rs	Approximately 5mm			

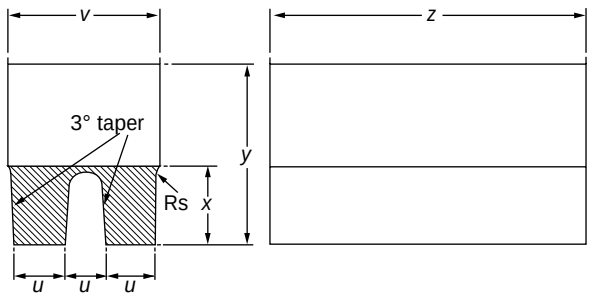

Fig. 2 Type B test samples (double U-type)

Dimensions	Standard sample
u (mm)	25
v (mm)	90
x (mm)	40
y (mm)	100
z	To suit testing machine
Rs	Approximately 5mm

▶

W10
cont'd

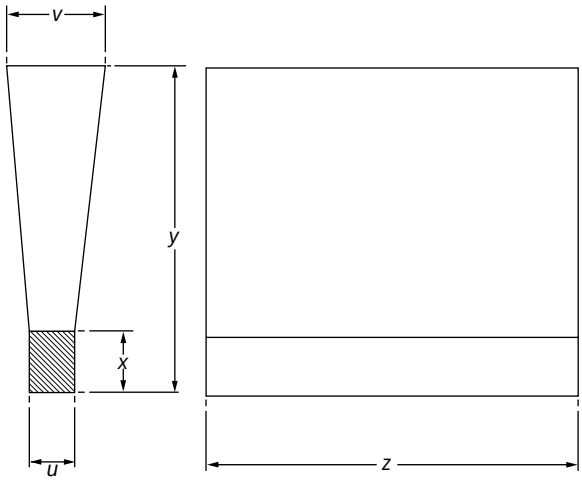

Fig. 3 Type C test samples (Y-type)

Dimensions	Standard sample	Alternative samples when specially required		
u (mm)	25	12	50	75
v (mm)	55	40	100	125
x (mm)	40	25	50	65
y (mm)	140	135	150	175
z	To suit testing machine			
Thickness of mould surrounding test sample	40mm min.	40mm min.	80mm min.	80mm min.

W10.6.6 Where separately cast test samples are used, they are to be cast in moulds made from the same type of material as used for the castings and are to be taken towards the end of pouring of the castings. The samples are not to be stripped from the moulds until the temperature is below 500°C.

W10.6.7 All test samples are to be suitably marked to identify them with the castings which they represent.

W10.6.8 Where castings are supplied in the heat treated condition, the test samples are to be heat treated together with the castings which they represent.

W10.6.9 One tensile test specimen is to be prepared from each test sample and is to be machined to the dimensions given in W2.

W10.6.10 All tensile tests are to be carried out using test procedures in accordance with W2. Unless otherwise agreed all tests are to be carried out in the presence of the Surveyors.

W10.6.11 Impact tests may additionally be required and in such cases a set of three test specimens of agreed type is to be prepared from each sample. Where Charpy V-notch test specimens are used, the dimensions and testing procedures are to be in accordance with W2.

W10 cont'd

W10.7 Mechanical properties
(Rev.2 May 2004)

W10.7.1 Table 1 gives the minimum requirements for 0,2% proof stress and elongation corresponding to different strength levels. Typical Brinell hardness values are also given in Table 1 and are intended for information purposes only.

W10.7.2 Castings may be supplied to any specified minimum tensile strength selected within the general limits detailed in Table 1 but subject to any additional requirements of the relevant construction Rules

Table 1 Mechanical properties

	Specified minimum tensile strength (N/mm^2)	0,2% proof stress (N/mm^2) min.	Elongation on $5,65\sqrt{So}$ (%) min.	Typical hardness values (Brinell) (see W10.7.1)	Impact energy		Typical structure of matrix (see W10.9.3)
					Test temp °C	KV(2) J min	
Ordinary qualities	370	230	17	120-180	-	-	Ferrite
	400	250	12	140-200	-	-	Ferrite
	500	320	7	170-240	-	-	Ferrite/Perlite
	600	370	3	190-270	-	-	Ferrite/Perlite
	700	420	2	230-300	-	-	Perlite
	800	480	2	250-350	-	-	Perlite or Tempered structure
Special qualities	350	220	22(3)	110-170	+20	17(14)	Ferrite
	400	250	18(3)	140-200	+20	14(11)	Ferrite

NOTE

1. For intermediate values of specified minimum tensile strength, the minimum values for 0,2% proof and elongation may be obtained by interpolation.
2. The average value measured on 3 Charpy V-notch specimens. One result may be below the average value but not less than the minimum shown in brackets.
3. In the case of integrally cast samples, the elongation may be 2 percentage points less.

W10.7.3 Unless otherwise agreed only the tensile strength and elongation need be determined. The results of all tensile tests are to comply with the appropriate requirements of Table 1.

W10.7.4 Re-test requirements for tensile tests are to be in accordance with UR W2.

▶

W10 cont'd

10.8 Inspection
(Rev. 1995)

W10.8.1 All castings are to be cleaned and adequately prepared for examination. The surfaces are not to be hammered, peened or treated in any way which may obscure defects.

W10.8.2 Before acceptance, all castings are to be visually examined including, where applicable, the examination of internal surfaces. Unless otherwise agreed the verification of dimensions is the responsibility of the manufacturer.

W10.8.3 Supplementary examination of castings by suitable nondestructive testing procedures is generally not required except in circumstances where there is reason to suspect the soundness of the casting.

W10.8.4 When required by the relevant construction Rules, castings are to be pressure tested before final acceptance.

W10.8.5 In the event of any casting proving defective during subsequent machining or testing is to be rejected notwithstanding any previous certification.

W10.8.6 Cast crankshaft are to be subjected to a magnetic particle inspection. Crack like indications are not allowed.

W10.9 Metallographic examination
(Rev. 1995)

W10.9.1 For crankshafts the metallographic examination will be mandatory.

W10.9.2 When required, a representative sample from each ladle of treated metal is to be prepared for metallographic examination. These samples may conviently be taken from the tensile test specimens but alternative arrangements for the provision of the samples may be adopted provided that they are taken from the ladle towards the end of the casting period.

W10.9.3 Examination of the samples is to show that at least 90% of the graphite is in a dispersed spheroidal or nodular form. Details of typical matrix structures are given in Table 1 and are intended for information purposes only.

10.10 Rectification of defective castings
(1978)

W10.10.1 At the discretion of the Surveyor, small surface blemishes mat be removed by local grinding.

W10.10.2 Subject to the prior approval of the Surveyor, castings containing local porosity may be rectified by impregnation with a suitable plastic filler, provided that the extent of the porosity is such that it does not adversely affect the strength of the casting.

W10.10.3 Repairs by welding are generally not permitted.

W10.11 Identification of castings
(Rev. 1995)

W10.11.1 The manufacturer is to adopt a system of identification which will enable all finished castings to be traced to the original ladle of treated metal and the Surveyor is to be given full facilities for so tracing the castings when required.

W10.11.2 Before acceptance, all castings which have been tested and inspected with satisfactory results are to be clearly marked by the manufacturer. At the discretion of individual Classification Societies any of the following particulars may be required.

W10
cont'd

(i) Quality of cast iron.
(ii) Identification number or other marking which will enable the full history of the casting to be traced.
(iii) Manufacturer's name or trade mark.
(iv) The Classification Society's name, initials or symbol.
(v) Abbreviated name of the Classification Society's local office.
(vi) Personal stamp of Surveyor responsible for inspection.
(vii) Where applicable, test pressure.
(viii) Date of final inspection.

W10.11.3 Where small castings are manufactured in large numbers, modified arrangements for identification may be specially agreed with the Classification Society.

W10.12 Certification
(1978)

W10.12.1 The manufacturer is to provide the Surveyor with a test certificate or shipping statement giving the following particulars for each casting or batch of castings which has been accepted:
(i) Purchaser's name and order number.
(ii) Description of castings and quality of cast iron.
(iii) Identification number.
(iv) Results of mechanical tests.
(v) Where applicable, general details of heat treatment.
(vi) Where specifically required, the chemical analysis of ladle samples.
(vii) Where applicable, test pressure.

◄◄

W11

(1979) (Rev.1 1986) (Rev. 2 1995 v.2.1) (Rev.3 June 2000) (Rev.4 May 2001) (Rev.5 July 2002) (Rev.6 May 2004) (Rev.7 Apr 2008) (Corr.1 Feb 2009) (Rev.8 Apr 2014) (Rev.9 May 2017)

Normal and higher strength hull structural steels

1. Scope

1.1 These requirements apply to weldable normal and higher strength hot-rolled steel plates, wide flats, sections and bars intended for use in hull construction.

1.2 The requirements are primarily intended to apply to steel products with a thickness as follows:

For steel plates and wide flats;
- All Grades: Up to 100mm in thickness

For sections and bars;
- All Grades: Up to 50mm in thickness

For greater thickness certain variations in the requirements may be allowed or required in particular cases after consideration of the technical circumstances involved.

1.3 Provision is made for four grades of normal strength steel based on the impact test requirements. For higher strength steels provision is made for three strength levels (315, 355 and 390 N/mm^2) each subdivided into four grades based on the impact test temperature.

1.4 Steels differing in chemical composition, deoxidation practice, conditions of supply and mechanical properties may be accepted, subject to the special approval of the Classification Society. Such steels are to be given a special designation.

Note:

1. Changes introduced in Rev.8 are to be uniformly implemented by IACS Societies on ships contracted for construction on or after 1 July 2015 and when the application for certification of steel plates is dated on or after 1 July 2015.

2. Changes introduced in Rev.9 are to be uniformly implemented by IACS Societies on ships contracted for construction on or after 1 July 2018, or when the application for certification of steel products is dated on or after 1 July 2018, or the application for certification of manufacturer approval is dated on or after 1 July 2018.

3. The “contracted for construction” date means the date on which the contract to build the vessel is signed between the prospective owner and the shipbuilder. For further details regarding the date of “contract for construction”, refer to IACS Procedural Requirement (PR) No. 29.

W11 (cont)

1.5 These requirements also apply to normal and higher strength Corrosion Resistant steels when such steel is used as the alternative means of corrosion protection for cargo oil tanks as specified in the performance standard MSC.289 (87) of Regulation 3-11, Part A-1, Chapter II-1 of the SOLAS Convention (Corrosion protection of cargo oil tanks of crude oil tankers). Corrosion Resistant steels as defined within this UR, are steels whose corrosion resistance performance in the bottom or top of the internal cargo oil tank is tested and approved to satisfy the requirements in MSC.289 (87) in addition to other relevant requirements for hull structural steels, structural strength and construction. It is not intended that such steels be used for corrosion resistant applications in other areas of a vessel that are outside of those specified in the performance standard MSC.289 (87) of Regulation 3-11, Part A-1, Chapter II-1 of the SOLAS Convention. These requirements apply to plates, wide flats, sections and bars in all grades up to a maximum thickness of 50 mm.

2. Approval

2.1 All materials are to be manufactured at works which have been approved by the Classification Society for the type and grade of steel which is being supplied. The suitability of each grade of steel for forming and welding is to be demonstrated during the initial approval tests at the steelworks. Approval of the steel works is to follow a scheme given in the Appendix A. For the steels intended for high heat input welding over 50kJ/cm, the approval of the manufacturer is to follow a scheme given in the Appendix B. For steels intended for a corrosion resistant designation, the approval of the manufacturer is to additionally follow the scheme given in Appendix C.

2.2 It is the manufacturer's responsibility to assure that effective process and production controls in operation are adhered to within the manufacturing specifications. Where control imperfection inducing possible inferior quality of product occurs, the manufacturer is to identify the cause and establish a countermeasure to prevent its recurrence. Also, the complete investigation report is to be submitted to the Surveyor.

For further use, each affected piece is to be tested to the Surveyor's satisfaction.

The frequency of testing for subsequent products offered may be increased to gain confidence in the quality at the discretion of the Society.

2.3 When steel is not produced at the works at which it is rolled, a certificate is to be supplied to the Surveyor at the rolling mill stating the process by which it was manufactured, the name of the manufacturer who supplied it, the number of the cast from which it was made and the ladle analysis. The Surveyor is to have access to the works at which the steel was produced.

Note:

1. The attention of the users must be drawn to the fact that when fatigue loading is present, the effective fatigue strength of a welded joint of higher strength steel may not be greater than that of a welded joint in normal strength steels.
2. Before subjecting steels produced by thermo-mechanical rolling to further heating for forming or stress relieving, or using high heat-input welding, special consideration must be given to the possibility of a consequent reduction in mechanical properties.

3. Method of Manufacture

3.1 Steel is to be manufactured by the basic oxygen, electric furnace or open hearth processes or by other processes specially approved by the Classification Society.

W11 (cont)

3.2 The deoxidation practice used for each grade is to comply with the appropriate requirements of Tables 1 and 2.

3.3 The rolling practice applied for each grade is to comply with the appropriate condition of supply of Tables 4 and 5.

The definitions of applicable rolling procedures and the schematic diagrams are given as follows:

(i) As Rolled, AR
This procedure involves steel being cooled as it is rolled with no further heat treatment. The rolling and finishing temperatures are typically in the austenite recrystallization region and above the normalising temperature. The strength and toughness properties of steel produced by this process are generally less than steel heat treated after rolling or than steel produced by advanced processes.

(ii) Normalising, N
Normalising involves heating rolled steel above the critical temperature, Ac_3, and in the lower end of the austenite recrystallization region for a specific period of time, followed by air cooling. The process improves the mechanical properties of as rolled steel by refining the grain size and homogenising the microstructure.

(iii) Controlled Rolling, CR (Normalizing Rolling, NR):
A rolling procedure in which the final deformation is carried out in the normalising temperature range, allowed to cool in air, resulting in a material condition generally equivalent to that obtained by normalising.

(iv) Quenching and Tempering, QT
Quenching involves a heat treatment process in which steel is heated to an appropriate temperature above the Ac_3, held for a specific period of time, and then cooled with an appropriate coolant for the purpose of hardening the microstructure. Tempering subsequent to quenching is a process in which the steel is reheated to an appropriate temperature not higher than the Ac_1, maintained at that temperature for a specific period of time to restore toughness properties by improving the microstructure and reduce the residual stress caused by the quenching process.

(v) Thermo-Mechanical Rolling, TM (Thermo-Mechanical Controlled Processing, TMCP):
This is a procedure which involves the strict control of both the steel temperature and the rolling reduction. Generally a high proportion of the rolling reduction is carried out close to the Ar_3 temperature and may involve the rolling in the dual phase temperature region. Unlike controlled rolled (normalised rolling) the properties conferred by TM (TMCP) cannot be reproduced by subsequent normalising or other heat treatment.

The use of accelerated cooling on completion of TM-rolling may also be accepted subject to the special approval of the Society. The same applies for the use of tempering after completion of the TM-rolling.

(vi) Accelerated Cooling, AcC
Accelerated cooling is a process, which aims to improve mechanical properties by controlled cooling with rates higher than air cooling immediately after the final TM-rolling operation. Direct quenching is excluded from accelerated cooling.

The material properties conferred by TM and AcC cannot be reproduced by subsequent normalising or other heat treatment.

W11
(cont)

Where NR (CR) and TM with/without AcC are applied, the programmed rolling schedules are to be verified by the Classification Society at the time of the steel works approval, and are to be made available when required by the attending Surveyor. On the manufacturer's responsibility, the programmed rolling schedules are to be adhered to during the rolling operation. Refer to the above 2.2. To this effect, the actual rolling records are to be reviewed by the manufacturer and occasionally by the Surveyor.

When deviation from the programmed rolling schedules or normalizing or quenching and tempering procedures occurs, the manufacturer shall take further measures required in the above 2.2 to the Surveyor's satisfaction.

W11 (cont)

Schematic Diagrams of Thermo-Mechanical and Conventional Processes

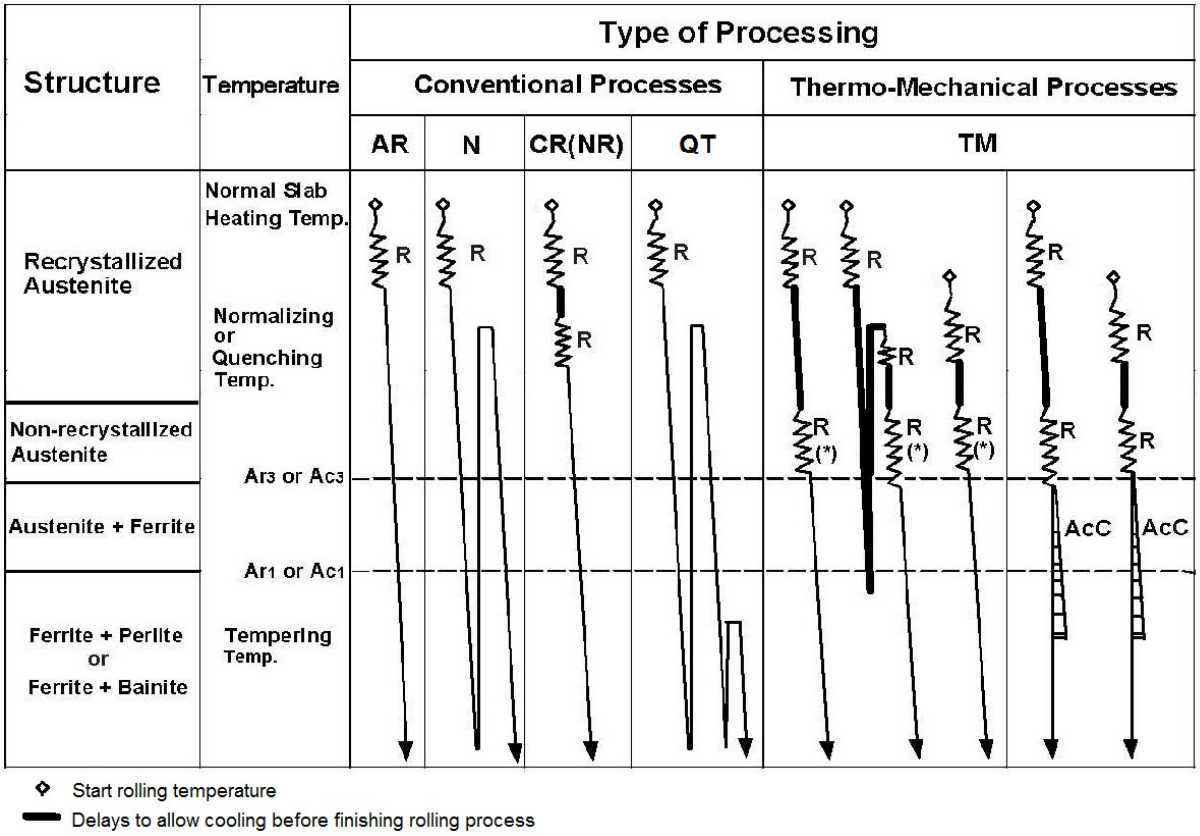

Notes:

AR:	As Rolled
N:	Normalizing
CR(NR):	Controlled Rolling (Normalizing Rolling)
QT:	Quenching and Tempering
TM:	Thermo-Mechanical Rolling (Thermo-Mechanical Controlled Process)
R:	Reduction
(*):	Sometimes rolling in the dual-phase temperature region of austenite and ferrite
AcC:	Accelerated Cooling

4. Chemical Composition

4.1 The chemical composition of samples taken from each ladle of each cast is to be determined by the manufacturer in an adequately equipped and competently staffed laboratory and is to comply with the appropriate requirements of Tables 1 and 2. For steel plates and wide flats over 50 mm thick, slight deviations in the chemical composition may be allowed as approved by the Classification Society.

4.2 The manufacturer's declared analysis will be accepted subject to occasional checks if required by the Surveyor.

W11 (cont)

Table 1 Chemical composition and deoxidation practice for normal strength steels

Grade	A	B	D	E
Deoxidation Practice	For t ≤ 50 mm Any method except rimmed steel [1] For t > 50 mm Killed	For t ≤ 50 mm Any method except rimmed For t > 50 mm Killed	For t ≤ 25 mm Killed For t > 25 mm Killed and fine grain treated	Killed and fine grain treated
Chemical Composition % [4] [7] [8] (ladle samples)	**Carbon plus 1/6 of the manganese content is not to exceed 0.40%**			
C max.	0.21 [2]	0.21	0.21	0.18
Mn min.	2.5 x C	0.80 [3]	0.60	0.70
Si max.	0.50	0.35	0.35	0.35
P max.	0.035	0.035	0.035	0.035
S max.	0.035	0.035	0.035	0.035
Al (acid soluble min)	-	-	0.015 [5] [6]	0.015 [6]

t = thickness

Notes:

1. Grade A sections up to a thickness of 12.5 mm may be accepted in rimmed steel subject to the special approval of the Classification Society.
2. Max. 0.23% for sections.
3. When Grade B steel is impact tested the minimum manganese content may be reduced to 0.60%.
4. When any grade of steel is supplied in the thermo-mechanically rolled condition variations in the specified chemical composition may be allowed or required by the Classification Society.
5. For Grade D steel over 25 mm thick.
6. For Grade D steel over 25 mm thick and Grade E steel the total aluminium content may be determined instead of acid soluble content. In such cases the total aluminium content is to be not less than 0.020%. A maximum aluminium content may also be specified by the Classification Society. Other suitable grain refining elements may be used subject to the special approval of the Classification Society.
7. The Classification Society may limit the amount of residual elements which may have an adverse effect on the working and use of the steel, e.g. copper and tin.
8. Where additions of any other element have been made as part of the steelmaking practice, the content is to be indicated.

W11 (cont)

Table 2 Chemical composition and deoxidation practice for higher strength steels

Grade (1)	A32 D32 E32 A36 D36 E36 A40 D40 E40	F32 F36 F40
Deoxidation Practice	killed and fine grain treated	
Chemical Composition % (5) (7) (ladle samples)		
C max.	0.18	0.16
Mn	0.90 – 1.60 (2)	0.90 – 1.60
Si max.	0.50	0.50
P max.	0.035	0.025
S max.	0.035	0.025
Al (acid soluble min)	0.015 (3) (4)	0.015 (3) (4)
Nb	0.02 – 0.05 (4)) total:	0.02 – 0.05 (4)) total:
V	0.05 – 0.10 (4)) 0.12	0.05 – 0.10 (4)) 0.12
Ti max.	0.02) max.	0.02) max.
Cu max.	0.35	0.35
Cr max.	0.20	0.20
Ni max.	0.40	0.80
Mo max.	0.08	0.08
N max.	-	0.009 (0.012 if Al is present)
Carbon Equivalent (6)		

Notes:

1. The letter “H” may be added either in front or behind the grade mark e.g. HA 32 or AH 32.
2. Up to a thickness of 12.5 mm the minimum manganese content may be reduced to 0.70%.
3. The total aluminium content may be determined instead of the acid soluble content. In such cases the total aluminim content is to be not less than 0.020%.
4. The steel is to contain aluminium, niobium, vanadium or other suitable grain refining elements, either singly or in any combination. When used singly the steel is to contain the specified minimum content of the grain refining element. When used in combination, the specified minimum content of a fine graining element is not applicable.
5. When any grade of higher strength steel is supplied in the thermo-mechanically rolled condition variations in the specified chemical composition may be allowed or required by the Classification Society.
6. When required, the carbon equivalent value is to be calculated from the ladle analysis using the following formula.

   $$Ceq = C + \frac{Mn}{6} + \frac{Cr + Mo + V}{5} + \frac{Ni + Cu}{15} \quad (\%)$$

   This formula is applicable only to steels which are basically of the carbon-manganese type and gives a general indication of the weldability of the steel.
7. Where additions of any other element have been made as part of the steelmaking practice, the content is to be indicated.

4.3 For TM (TMCP) steels the following special requirements apply:

(i) The carbon equivalent value is to be calculated from the ladle analysis using the following formula and to comply with the requirements of Table 3;

$$Ceq = C + \frac{Mn}{6} + \frac{Cr + Mo + V}{5} + \frac{Ni + Cu}{15} \quad (\%)$$

(ii) The following formula (cold cracking susceptibility) may be used for evaluating weldability instead of the carbon equivalent at the discretion of the Classification Society;

W11 (cont)

$$Pcm = C + \frac{Si}{30} + \frac{Mn}{20} + \frac{Cu}{20} + \frac{Ni}{60} + \frac{Cr}{20} + \frac{Mo}{15} + \frac{V}{10} + 5B\ \%$$

In such cases the cold cracking susceptibility value required may be specified by the Classification Society.

Table 3 Carbon equivalent for higher strength steels up to 100 mm in thickness produced by TM

Grade	Carbon Equivalent, max. (%) (1)	
	t ≤ 50	50 < t ≤ 100
A32, D32, E32, F32	0.36	0.38
A36, D36, E36, F36	0.38	0.40
A40, D40, E40, F40	0.40	0.42

t: thickness (mm)

Notes:

(1) It is a matter for the manufacturer and shipbuilder to mutually agree in individual cases as to whether they wish to specify a more stringent carbon equivalent.

5. Condition of Supply

5.1 All materials are to be supplied in a condition complying with the appropriate requirements of Tables 4 and 5.

Table 4 Condition of supply for normal strength steels (1)

Grades	Thickness	Condition of Supply
A	≤ 50 mm	Any
	> 50 mm ≤ 100 mm	Normalized, controlled rolled or thermo-mechanically rolled (2)
B	≤ 50 mm	Any
	> 50 mm ≤ 100 mm	Normalized, controlled rolled or thermo-mechanically rolled (2)
D	≤ 35 mm	Any
	> 35 mm ≤ 100 mm	Normalized, controlled rolled or thermo-mechanically rolled (3)
E	≤ 100 mm	Normalized or thermo-mechanically rolled (3)

Notes:

(1) These conditions of supply and the impact test requirements are summarised in Table 8.
(2) Subject to the special approval of the Classification Society, Grades A and B steel plates may be supplied in the as rolled condition - see W11.14.2 (ii).
(3) Subject to the special approval of the Classification Society, sections in Grade D steel may be supplied in the as rolled condition provided satisfactory results are consistently obtained from Charpy V-notch impact tests. Similarly sections in Grade E steel may be supplied in the as rolled or controlled rolled condition. The frequency of impact tests is to be in accordance with W11.14.2 (ii) and W11.14.3 (iii) respectively.

W11 (cont)

Table 5 Condition of supply for higher strength steels (1)

Grades	Grain Refining Elements Used	Thickness	Condition of supply
A32 A36	Nb and/or V	≤ 12.5 mm	Any
		> 12.5 mm ≤ 100 mm	Normalized, controlled rolled or thermo-mechanically rolled (3)
	Al alone or with Ti	≤ 20 mm	Any
		> 20 mm ≤ 35 mm	Any, as rolled subject to special approval of the Classification Society (2)
		> 35 mm ≤ 100 mm	Normalized, controlled rolled or thermo-mechanically rolled (3)
A40	Any	≤ 12.5 mm	Any
		> 12.5 mm ≤ 50 mm	Normalized, controlled rolled or thermo-mechanically rolled
		> 50 mm ≤ 100 mm	Normalized, thermo-mechanically rolled or quenched and tempered
D32 D36	Nb and/or V	≤ 12.5 mm	Any
		> 12.5 mm ≤ 100 mm	Normalized, controlled rolled or thermo-mechanically rolled (3)
	Al alone or with Ti	≤ 20 mm	Any
		> 20 mm ≤ 25 mm	Any, as rolled subject to special approval of the Classification Society (2)
		> 25 mm ≤ 100 mm	Normalized, controlled rolled or thermo-mechanically rolled (3)
D40	Any	≤ 50 mm	Normalized, controlled rolled or thermo-mechanically rolled
		> 50 mm ≤ 100 mm	Normalized, thermo-mechanically rolled or quenched and tempered
E32 E36	Any	≤ 50 mm	Normalized or thermo-mechanically rolled (3)
		> 50 mm ≤ 100 mm	Normalized, thermo-mechanically rolled
E40	Any	≤ 50 mm	Normalized, thermo-mechanically rolled or quenched and tempered
		> 50 mm ≤ 100 mm	Normalized, thermo-mechanically rolled or quenched and tempered
F32 F36 F40	Any	≤ 50 mm	Normalized, thermo-mechanically rolled or quenched and tempered (4)
		> 50 mm ≤ 100 mm	Normalized, thermo-mechanically rolled or quenched and tempered

Notes:

(1) These conditions of supply and the requirements for impact tests are summarised in Table 9.
(2) The frequency of impact tests is to be in accordance with W11.14.2 (ii).
(3) Subject to the special approval of the Classification Society, sections in Grades A32, A36, D32 and D36 steels may be supplied in the as rolled condition provided satisfactory results are consistently obtained from Charpy V-notch impact tests. Similarly sections in Grades E32 and E36 steels maybe supplied in the as rolled or controlled rolled condition. The frequency of impact tests is to be in accordance with W11.14.2 (ii) and W11.14.2 (iii) respectively.
(4) Subject to the special approval of the Classification Society, sections in Grades F32 and F36 steels may be supplied in the controlled rolled condition. The frequency of impact tests is to be in accordance with W11.14.3 (iii).

W11 (cont)

6. Mechanical Properties

6.1 For tensile test either the upper yield stress (ReH) or where ReH cannot be determined, the 0.2 percent proof stress (Rp 0.2) is to be determined and the material is considered to comply with the requirements if either value meets or exceeds the specified minimum value for yield strength (Re).

6.2 The results obtained from tensile tests are to comply with the appropriate requirements of Tables 6 and 7.

Table 6 Mechanical properties for normal strength steels

Grade	Yield Strength ReH (N/mm^2) min	Tensile Strength Rm (N/mm^2)	Elongation ($5.65\sqrt{S_0}$) A_5 (%)	Impact Test						
				Test Temp. °C	Average Impact Energy (J) min					
					t ≤ 50		50 < t ≤ 70		70 < t ≤ 100	
					Long(3)	Trans(3)	Long(3)	Trans(3)	Long(3)	Trans(3)
A	235	400/520 (1)	22 (2)	+20	-	-	34 (5)	24 (5)	41 (5)	27 (5)
B				0	27 (4)	20 (4)	34	24	41	27
D				-20	27	20	34	24	41	27
E				-40	27	20	34	24	41	27

t: thickness (mm)

Notes:

(1) For all thicknesses of Grade A sections the upper limit for the specified tensile strength range may be exceeded at the discretion of the Classification Society.
(2) For full thickness flat tensile test specimens with a width of 25 mm and a gauge length of 200mm the elongation is to comply with the following minimum values:

Thickness mm		> 5	> 10	> 15	> 20	> 25	> 30	> 40
	≤ 5	≤ 10	≤ 15	≤ 20	≤ 25	≤ 30	≤ 40	≤ 50
Elongation %	14	16	17	18	19	20	21	22

(3) See paragraph W11.6.3.
(4) Charpy V-notch impact tests are generally not required for Grade B steel with thickness of 25 mm or less.
(5) Impact tests for Grade A over 50 mm thick are not required when the material is produced using fine grain practice and furnished normalised. TM rolling may be accepted without impact testing at the discretion of the Society.

W11 (cont)

Table 7 Mechanical properties for higher strength steels

Grade	Yield Strength ReH (N/mm^2) min	Tensile Strength Rm (N/mm^2)	Elongation ($5.65\sqrt{S_0}$) A_5 (%)	Impact Test						
				Test Temp. °C	Average Impact Energy (J) min					
					t ≤ 50		50 < t ≤ 70		70 < t ≤ 100	
					Long(2)	Trans(2)	Long(2)	Trans(2)	Long(2)	Trans(2)
A32	315	440/570	22 (1)	0	31 (3)	22 (3)	38	26	46	31
D32				-20	31	22	38	26	46	31
E32				-40	31	22	38	26	46	31
F32				-60	31	22	38	26	46	31
A36	355	490/630	21 (1)	0	34 (3)	24 (3)	41	27	50	34
D36				-20	34	24	41	27	50	34
E36				-40	34	24	41	27	50	34
F36				-60	34	24	41	27	50	34
A40	390	510/660	20 (1)	0	39	26	46	31	55	37
D40				-20	39	26	46	31	55	37
E40				-40	39	26	46	31	55	37
F40				-60	39	26	46	31	55	37

t: thickness (mm)

Notes:

(1) For full thickness flat tensile test specimens with a width of 25mm and a gauge length of 200 mm the elongation is to comply with the following minimum values:

Thickness (mm)	Grade	≤ 5	> 5 ≤ 10	> 10 ≤ 15	> 15 ≤ 20	> 20 ≤ 25	> 25 ≤ 30	> 30 ≤ 40	> 40 ≤ 50
Elongation %	A32, D32, E32 & F32	14	16	17	18	19	20	21	22
	A36, D36, E36 & F36	13	15	16	17	18	19	20	21
	A40, D40, E40 & F40	12	14	15	16	17	18	19	20

(2) See paragraph W11.6.3.
(3) For Grades A32 and A36 steels a relaxation in the number of impact tests for acceptance purposes may be permitted by special agreement with the Classification Society provided that satisfactory results are obtained from occasional check tests.

6.3 Minimum average energy values are specified for Charpy V-notch impact test specimens taken in either the longitudinal or transverse directions (see W11.13.2). Generally only longitudinal test specimens need to be prepared and tested except for special applications where transverse test specimens may be required by the purchaser or the Classification Society. Transverse test results are to be guaranteed by the supplier.

The tabulated values are for standard specimens 10 mm x 10 mm. For plate thicknesses less than 10 mm, impact test may be waived at the discretion of the Classification Society or sub-size specimens, as specified in UR W2, may be used.

6.4 The average value obtained from one set of three impact tests is to comply with the requirements given in Tables 6 and 7. One individual value only may be below the specified average value provided it is not less than 70% of that value.

6.5 Generally, impact tests are not required when the nominal plate thickness is less than 6 mm.

7. Surface quality

7.1 The steel is to be free from surface defects prejudicial to the use of the material for the intended application.
The finished material is to have a surface quality in accordance with a recognized standard such as EN 10163 parts 1, 2 and 3, or an equivalent standard accepted by the Classification Society, unless otherwise specified in this section.

7.2 The responsibility for meeting the surface finish requirements rests with the manufacturer of the material, who is to take the necessary manufacturing precautions and is to inspect the products prior to delivery. At that stage, however, rolling or heat treatment scale may conceal surface discontinuities and defects. If, during the subsequent descaling or working operations, the material is found to be defective, the Classification Society may require materials to be repaired or rejected.

7.2.1 The surface quality inspection method shall be in accordance with recognized national or international standards agreed between purchaser and manufacturer, accepted by the Classification Society.

7.2.2 If agreed by the manufacturer and purchaser, steel may be ordered with improved surface finish over and above these requirements.

7.3 Acceptance Criteria

7.3.1 Imperfections

Imperfections of a harmless nature, for example pitting, rolled-in scale, indentations, roll marks, scratches and grooves, regarded as being inherent of the manufacturing process, are permissible irrespective of their number, provided the maximum permissible limits of Class A of EN 10163-2 or limits specified in a recognized equivalent standard accepted by the Classification Society, are not exceeded and the remaining plate or wide flat thickness remains within the average allowable minus thickness tolerance specified in UR W13.
Total affected area with imperfection not exceeding the specified limits are not to exceed 15 % of the total surface in question.

7.3.2 Defects

Affected areas with imperfections with a depth exceeding the limits of Class A of EN 10163-2 or the maximum permissible limits specified in a recognized equivalent standard accepted by the Classification Society, shall be repaired irrespective of their number.

Cracks, injurious surface flaws, shells (over lapping material with non-metallic inclusion), sand patches, laminations and sharp edged seams (elongated defects) visually evident on surface and/or edge of plate are considered defects, which would impair the end use of the product and which require rejection or repair, irrespective of their size and number.

7.4 Repair

7.4.1 Grinding repair

Grinding may be applied provided all the conditions below are adhered to:

(a) The nominal product thickness will not be reduced by more than 7% or 3 mm, whichever is the less.

(b) Each single ground area does not exceed 0,25 m^2.

(c) All ground areas do not exceed 2% of the total surface in question.

(d) Ground areas lying in a distance less than their average breadth to each other are to be regarded as one single area.

(e) Ground areas lying opposite each other on both surfaces shall not decrease the product thickness by values exceeding the limits as stated under (a).

Defects or unacceptable imperfections are to be completely removed by grinding and the remaining plate or wide flat thickness shall remain within the average allowable minus thickness tolerance specified in UR W13. The ground areas shall be a smooth transition to the surrounding surface of the product. Complete elimination of the defect is to be verified by magnetic particle or by liquid penetrant testing.

7.4.2 Welding repair

Weld repair procedures and the method are to be reported and be approved by the Classification Societies. Repair of defects such as unacceptable imperfections, cracks, shells or seams shall be followed by magnetic particle or liquid penetrant testing.

Local defects which cannot be repaired by grinding as stated in 7.4.1 may be repaired by welding with the agreement of the Classification Society subject to the following conditions:

(a) Any single welded area shall not exceed 0,125 m^2 and the sum of all areas shall not exceed 2% of the surface side in question.

(b) The distance between two welded areas shall not be less than their average width.

(c) The weld preparation shall not reduce the thickness of the product below 80% of the nominal thickness. For occasional defects with depths exceeding the 80% limit, special consideration at the Surveyor's discretion will be necessary.

(d) If weld repair depth exceeds 3 mm, UT may be requested by the Classification Society. If required, UT shall be carried out in accordance with an approved procedure.

(e) The repair shall be carried out by qualified welders using an approved procedure for the appropriate steel grade. The electrodes shall be of low hydrogen type and shall be dried in accordance with the manufacturer's requirements and protected against rehumidification before and during welding.

7.5 The surface quality and condition requirement herein are not applied to products in forms of bars and tubulars, which will be subject to manufacturers' conformance standards.

8. Internal soundness

8.1 If plates and wide flats are ordered with ultrasonic inspection, this is to be made in accordance with an accepted standard at the discretion of the Classification Society.

8.2 Verification of internal soundness is the responsibility of the manufacturer. The acceptance of internal soundness by the Classification Society's surveyor shall not absolve the manufacturer from this responsibility.

9. Tolerances

9.1 Unless otherwise agreed or specially required the thickness tolerances in Unified Requirement W13 "Thickness tolerances of steel plates and wide flats" are applicable.

10. Identification of Materials

10.1 The steelmaker is to adopt a system for the identification of ingots, slabs and finished pieces which will enable the material to be traced to its original cast.

10.2 The Surveyor is to be given full facilities for so tracing the material when required.

11. Testing and Inspection

11.1 Facilities for Inspection

The manufacturer is to afford the Surveyor all necessary facilities and access to all relevant parts of the works to enable him to verify that the approved process is adhered to, for the selection of test materials, and the witnessing of tests, as required by the Rules, and for verifying the accuracy of the testing equipment.

11.2 Testing Procedures

The prescribed tests and inspections are to be carried out at the place of manufacture before dispatch. The test specimens and procedures are to be in accordance with Unified Requirement W2 "Test Specimens and Mechanical Testing Procedures for Materials". All the test specimens are to be selected and stamped by the Surveyor and tested in his presence, unless otherwise agreed.

11.3 Through Thickness Tensile Tests

If plates and wide flats with thickness of 15 mm and over are ordered with through thickness properties, the through thickness tensile test in accordance with Unified Requirement W14 "Steel Plates and Wide Flats with Specified Minimum Through Thickness Properties ("Z" quality)" is to be carried out.

11.4 Dimensions

Verification of dimensions are the responsibility of the steel maker. The acceptance by the Classification Society's Surveyor shall not absolve the steel maker from this responsibility.

12. Test Material

12.1 Definitions

(a) Piece: the term "piece" is understood to mean the rolled product from a single slab, billet or ingot if this is rolled directly into plates, sections or bars.

(b) Batch: a number of similar pieces presented as a group for acceptance tests.

W11 (cont)

12.2 Test Samples

(a) All material in a batch presented for acceptance tests is to be of the same product form e.g. plates, flats, sections, etc. from the same cast and in the same condition of supply.

(b) The test samples are to be fully representative of the material and, where appropriate, are not to be cut from the material until heat treatment has been completed.

(c) The test specimens are not to be separately heat treated in any way.

(d) Unless otherwise agreed the test samples are to be taken from the following positions:

(i) *Plates and flats with a width ≥ 600 mm.* The test samples are to be taken from one end at a position approximately midway between the axis in the direction of the rolling and the edge of the rolled product (see Fig. 1). Unless otherwise agreed the tensile test specimens are to be prepared with their longitudinal axes transverse to the final direction of rolling.

(ii) *Flats with a width < 600 mm, bulb flats and other sections.* The test samples are to be taken from one end at a position approximately one third from the outer edge (see Figs. 2, 3 and 4) or in the case of small sections, as near as possible to this position. In the case of channels, beams or bulb angles, the test samples may alternatively be taken from a position approximately one quarter of the width from the web centre line or axis (see Fig. 3). The tensile test specimens may be prepared with their longitudinal axes either parallel or transverse to the final direction of rolling.

(iii) *Bars and other similar products.* The test samples are to be taken so that the longitudinal axes of the test specimens are parallel to the direction of rolling and are as near as possible to the following
– for non-cylindrical sections, at one third of the half diagonal from the outside,
– for cylindrical sections, at one third of the radius from the outside (see Fig. 6).

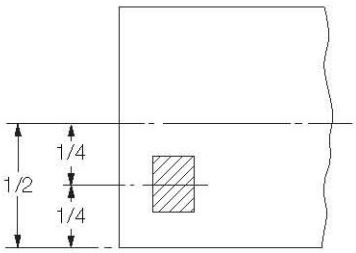

Fig. 1 Plates and flats

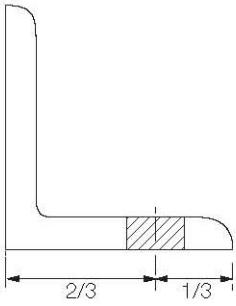

Fig. 2 Angles

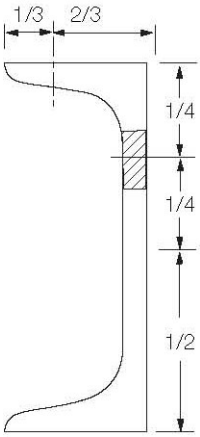

Fig. 3 Channel

W11
(cont)

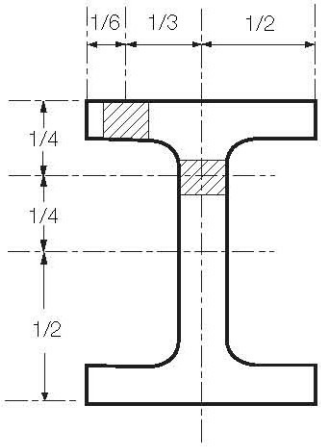

Fig. 4 H-sections

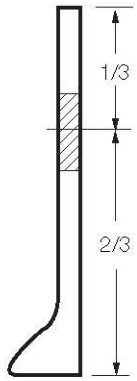

Fig. 5 Bulb flats

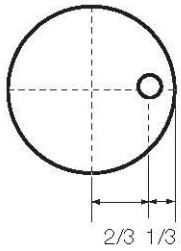

Fig. 6 Bars;

13. Mechanical Test specimens

13.1 Tensile Test Specimens. The dimensions of the tensil test specimens are to be in accordance with Unified Requirement, W2. Generally for plates, wide flats and sections flat test specimens of full product thickness are to be used. Round test specimens may be used when the product thickness exceeds 40 mm or for bards and other similar products. Alternatively for small sizes of bars, etc. test specimens may consist of a suitable length of the full cross section of the product.

13.2 Impact Test Specimens. The impact test specimens are to be of the Charpy V-notch type cut with their edge within 2 mm from the “as rolled” surface with their longitudinal axes either parallel (indicated “Long” in Table 6 & 7) or transverse (indicated "Trans" in Tables 6 & 7) to the final direction of rolling of the material. The notch is to be cut in a face of the test specimen which was originally perpendicular to the rolled surface. The position of the notch is not to be nearer than 25 mm to a flame cut or sheared edge (see also W11.6.3). Where the product thickness exceeds 40 mm, the impact test specimens are to be taken with their longitudinal axis at a quarter thickness position.

14. Number of Test Specimens

14.1 Number of Tensile Tests. For each batch presented, except where specially agreed by the Classification Society, one tensile test is to be made from one piece unless the weight of finished material is greater than 50 tonnes or fraction thereof. Additionally tests are to be made for every variation of 10 mm in the thickness or diameter of products from the same cast.

14.2 Number of Impact Tests (except for Grades E, E32, E36, E40, F32, F36 and F40), see Tables 8 & 9.

(i) Except where otherwise specified or specially agreed by the Classification Society, for each batch presented, at least one set of three Charpy V-notch test specimens is to be made from one piece unless the weight of finished material is greater than 50 tonnes, in which case one extra set of three test specimens is to be made from a different piece from each 50 tonnes or fraction thereof. When steel plates except for Grade A steel over 50 mm in thickness is supplied in the controlled rolled condition, the frequency of impact test is to be made from a different piece from each 25 tonnes or fraction thereof.

(ii) For steel plates of Grades A40 and D40 with thickness over 50 mm in normalized or TM condition, one set of impact test specimens is to be taken from each batch of 50 tonnes or fraction thereof. For those in QT condition, one set of impact test specimens is to be taken from each length as heat treated.

(iii) When, subject to the special approval of the Classification Society, material is supplied in the as rolled condition, the frequency of impact tests is to be increased to one set from each batch of 25 tonnes or fraction thereof. Similarly Grade A steel over 50 mm in thickness may be supplied in the as rolled condition. In such case one set of three Charpy V-notch test specimens is to be taken from each batch of 50 tonnes or fraction thereof.

(iv) The piece selected for the preparation of the test specimens is to be the thickest in each batch.

14.3 Number of Impact Tests (Grades E, E32, E36, E40, F32, F36 and F40).

(i) For steel plates supplied in the normalised or TM condition one set of impact test specimens is to be taken from each piece. For quenched and tempered steel plates one set of impact test specimens is to be taken from each length as heat treated.

(ii) For sections one set of impact tests is to be taken from each batch of 25 tonnes or fraction thereof.

(iii) When, subject to the special approval of the Classification Society, sections other than Grades E40 and F40 are supplied in the as rolled or controlled rolled condition, one set of impact tests is to be taken from each batch of 15 tonnes or fraction thereof.

(iv) For (ii) and (iii) above the piece selected for the preparation of the test specimens is to be the thickest in each batch.

15. Retest Procedures

15.1 When the tensile test from the first piece selected in accordance with W11.14.1 fails to meet the requirements re-test requirements for tensile tests are to be in accordance with UR W2.

15.2 If one or both of the additional tests referred to above are unsatisfactory, the piece is to be rejected, but the remaining material from the same batch may be accepted provided that two of the remaining pieces in the batch selected in the same way, are tested with satisfactory results. If unsatisfactory results are obtained from either of these two pieces then the batch of material is to be rejected.

15.3 Re-test requirements for Charpy impact tests are to be in accordance with UR W2.

15.4 When the initial piece, representing a batch, gives unsatisfactory results from the additional Charpy V-notch impact tests referred to above, this piece is to be rejected but the remaining material in the batch may be accepted provided that two of the remaining pieces in the batch are tested with satisfactory results. If unsatisfactory results are obtained from either of these two pieces then the batch of material is to be rejected. The pieces selected for these additional tests are to be the thickest remaining in the batch.

15.5 If any test specimen fails because of faulty preparation, visible defects or (in the case of tensile test) because of fracturing outside the range permitted for the appropriate gauge

length, the defective test piece may, at the Surveyors discretion, be disregarded and replayed by an additional test piece of the same type.

15.6 At the option of the steelmaker, when a batch of material is rejected, the remaining pieces in the batch may be resubmitted individually for test and those pieces which give satisfactory results may be accepted.

15.7 At the option of the steelmaker, rejected material may be resubmitted after heat treatment or reheat treatment, or may be resubmitted as another grade of steel and may then be accepted provided the required tests are satisfactory.

15.8 In the event of any material proving unsatisfactory during subsequent working or fabrication, such material may be rejected, notwithstanding any previous satisfactory testing and/or certification.

16. Branding

16.1 Every finished piece is to be clearly marked by the maker in at least one place with the Classification Society's brand and the following particulars:

(i) Unified identification mark for the grade steel (e.g. A, A36).
(ii) Steels which have been specially approved by the Classification Society and which differ from these requirements (see W11.1.4) are to have the letter "S" after the above identification mark (e.g. A36S, ES).
(iii) When required by the Classification Society, material supplied in the thermo-mechanically controlled process condition is to have the letters TM added after the identification mark (e.g. E36 TM).
(iv) Name or initials to identify the steelworks.
(v) Cast or other number to identify the piece.
(vi) If required by the purchaser, his order number or other identification mark.

16.2 Steel plates that have complied with the requirements for corrosion resistant steel will be identified by adding a corrosion designation to the unified identification mark for the grade of steel.

The corrosion resistant steel is to be designated according to its area of application as follows:

- Lower surface of strength deck and surrounding structures; **RCU**
- Upper surface of inner bottom plating and surrounding structures; **RCB**
- For both strength deck and inner bottom plating; **RCW**

Example of designation:

A36 TM RCB Z35

16.3 The above particulars, but excluding the manufacturer's name or trade mark where this is embossed on finished products are to be encircled with paint or otherwise marked so as to be easily recognisable.

16.4 Where a number of light materials are securely fastened together in bundles the manufacturer may, subject to the agreement of the Classification Society, brand only the top piece of each bundle, or alternatively, a firmly fastened durable label containing the brand may be attached to each bundle.

16.5 In the event of any material bearing the Classification Society's brand failing to comply with the test requirements, the brand is to be unmistakably defaced by the manufacturer.

17. Documentation

17.1 The Surveyor is to be supplied with the number of copies as required by the Classification Society, of the test certificates or shipping statements for all accepted materials. The Classification Society may require separate documents of each grade of steel. These documents are to contain, in addition to the description, dimensions, etc., of the material, at least the following particulars:

(i) Purchaser's order number and if known the hull number for which the material is intended.
(ii) Identification of the cast and piece including, where appropriate, the test specimen number.
(iii) Identification of the steelworks.
(iv) Identification of the grade of steel.
(v) Ladle analysis (for elements specified in Tables 1 & 2).
(vi) For steel with a corrosion resistant steel designation the weight percentage of each element added or intentionally controlled for improving corrosion resistance.
(vii) Condition of supply when other than as rolled i.e. normalised, controlled rolled or thermomechanically rolled.
(viii) State if rimming steel has been supplied for grade A sections, up to 12.5 mm thick.
(ix) Test Results

17.2 Before the test certificates or shipping statements are signed by the Surveyor, the manufacturer is required to furnish him with a written declaration stating that the material has been made by an approved process and that it has been subjected to and has withstood satisfactory the required tests in the presence of the Surveyor or his authorized deputy. The name of the Classification Society is to appear on the test certificate. The following form of declaration will be accepted if stamped or printed on each test certificate or shipping statement with the name of the steelworks and initialled for the makers by an authorized official:

"We hereby certify that the material has been made by an approved process and has been satisfactorily tested in accordance with the Rules of the Classification Society."

W11 (cont)

Table 8 Required condition of supply and number of impact tests for normal strength steels

Grade	Deoxidation Practice	Products	Condition of Supply (Batch for Impact Tests) (1)(2)		
			Thickness (mm) 10 – 12.5	12.5 – 50	50 – 100
A	Rimmed	Sections	A(-)	Not applicable	
	For t ≤ 50mm Any method except rimmed For t > 50mm Killed	Plates	A(-)		N(-) TM(-) (3) CR (50), AR* (50)
		Sections	A(-)		Not applicable
B	For t ≤ 50mm Any method except rimmed For t > 50mm Killed	Plates	A(-)	A(50)	N(50) TM(50) CR (25), AR* (25)
		Sections	A(-)	A(50)	Not applicable
D	Killed	Plates Sections	A(50)	Not applicable	
	Plates Killed and fine grain treated	Plates	A(50)	N(50) CR(50) TM(50)	N(50) TM(50) CR(25)
		Sections	A(50)	N(50) CR(50) TM(50) AR*(25)	Not applicable
E	Killed and fine grain treated	Plates	N(Each piece) TM(Each piece)		
		Sections	N(25) TM(25) AR* (15), CR*(15)		Not applicable

Remarks:

1. Condition of Supply
   A – Any
   N – Normalised Condition
   CR – Controlled Rolled Condition
   TM – Thermo-Mechanical rolling
   AR* – As Rolled Condition subject to special approval of the Classification Society
   CR* – Controlled Rolled Condition subject to special approval of the Classification Society
2. Number of Impact Tests
   One set of impact tests is to be taken from each batch of the "specified weight" in ( ) or fraction thereof.
3. See Note (5) of Table 6.

W11 (cont)

Table 9 Required condition of supply and number of impact tests for higher strength steels

Grade	Deoxidation Practice	Grain Refining Elements	Products	Condition of supply (Batch for Impact Tests (1)(2)) Thickness (mm) 10 – 12.5	12.5 – 20	20 – 25	25 – 30	30 – 35	35 – 40	40 – 50	50 – 100
A32 A36	Killed and fine grain treated	Nb and/or V	Plates	A(50)	N(50) CR(50),TM(50)						N(50), CR(25), TM(50)
			Sections	A(50)	N(50) CR(50), TM(50) AR* (25)						Not applicable
		Al alone or with Ti	Plates	A(50)	AR* (25)		Not applicable				
					N(50), CR(50) TM(50)						N(50), CR(25), TM(50)
			Sections	A (50)	N(50) CR(50) TM(50) AR* (25)						Not applicable
A40	Killed and fine grain treated	Any	Plates	A(50)	N(50) CR(50) TM(50)						N(50) TM(50) QT(Each length as heat treated)
			Sections	A(50)	N(50) CR(50) TM(50)						Not applicable
D32 D36	Killed and fine grain treated	Nb and/or V	Plates	A(50)	N(50) CR(50), TM(50)						N(50), CR(25), TM(50)
			Sections	A(50)	N(50) CR(50), TM(50) AR* (25)						Not applicable
		Al alone or with Ti	Plates	A(50)	AR*(25)	Not applicable					
					N(50), CR(50), TM (50)						N(50), CR25, TM(50)
			Sections	A(50)	N(50) CR(50), TM(50) AR* (25)						Not applicable
D40	Killed and fine grain treated	Any	Plates	N(50) CR(50) TM(50)							N(50) TM(50) QT(Each length as heat treated)
			Sections	N(50) CR(50) TM(50)							Not applicable
E32 E36	Killed and fine grain treated	Any	Plates	N(Each piece) TM(Each piece)							
			Sections	N(25) TM(25) AR* (15), CR* (15)							Not applicable
E40	Killed and fine grain treated	Any	Plates	N(Each piece) TM(Each piece) QT(Each length as heat treated)							N (Each piece) TM(Each piece) QT(Each length as heat treated)
			Sections	N(25) TM(25) QT(25)							Not applicable

W11 (cont)

Table 9 Required condition of supply and number of impact tests for higher strength steels (cont'd)

Grade	Deoxidation Practice	Grain Refining Elements	Products	Condition of supply (Batch for Impact Tests (1)(2) Thickness (mm) 10 12.5 20 25 30 35 40 50 100	
F32 F36	Killed and fine grain treated	Any	Plates	N(Each piece) TM(Each piece) QT(Each length as heat treated)	N(Each piece) TM(Each piece) QT(Each length as heat treated)
			Sections	N(25) TM(25) QT(25) CR*(15)	Not applicable
F40	Killed and fine grain treated	Any	Plates	N(Each piece) TM(Each piece) QT (Each length as heat treated)	N(Each piece) TM(Each piece) QT (Each length as heat treated)
			Sections	N(25) TM(25) QT(25)	Not applicable

Remarks:

(1) Condition of Supply
- A - Any
- N - Normalized Condition
- CR - Controlled Rolled Condition
- TM - Thermo-Mechanical Rolling
- QT - Quenched and Tempered Condition
- AR* - As Rolled Condition subject to the special approval of the Classification Society
- CR* - Controlled Rolled Condition subject to the special approval of the Classification Society

(2) Number of Impact Tests
One set of impact tests is to be taken from each batch of the "specified weight" in ( ) or fraction thereof.
For grades A32 and A36 steels a relaxation in the number of impact tests may be permitted. (See Note(3) of Table 7.)

W11
(cont)

Appendix A. Manufacturing Approval Scheme of Hull Structural Steels

A1. Manufacturing Approval Scheme of Semi Finished Products for Hull Structural Steels

1. Scope of application

This document specifies, as given in W11.2.1, the scheme for the approval of the manufacturing process of semi-finished products such as ingots, slabs, blooms and billets for the structural steels.

The manufacturing approval scheme is valid for verifying the manufacturer's capability to provide satisfactory products stably under effective process and production controls in which is required in W11.2.2.

2. Approval application

2.1 Documents to be submitted

The manufacturer has to submit to the Society, request of approval, proposed approval test program (see 3.1) and general information relevant to:

a) Name and site address of the manufacturer, location of the workshops, general indications relevant to the background, dimension of the works, estimated total annual production of finished products for shipbuilding and for other applications, as deemed useful.

b) Organization and quality:
- organizational chart
- staff employed
- staff employed and organization of the quality control department
- qualification of the personnel involved in activities related to the quality of the products
- certification of compliance of the quality system with IS0 9001 or 9002, if any
- approval certificates already granted by other Classification Societies, if any

c) Manufacturing facilities
- flow chart of the manufacturing process
- origin and storage of raw materials
- storage of finished products
- equipment for systematic control during fabrication

d) Details of inspections and quality control facilities
- details of system used for identification of materials at the different stages of manufacturing
- equipment for chemical analyses and relevant calibration procedures
- list of quality control procedures

e) Type of products (ingots, slabs, blooms, billets); types of steel (normal or higher strength), range of thickness and aim material properties as follows:
- range of chemical composition and aim analyses, including grain refining, micro alloying and residual elements, for the various grades of steel; if the range of chemical

W11
(cont)

composition depends on thickness and supply condition, the different ranges are to be specified, as appropriate
- aim maximum carbon equivalent according to IIW formula
- aim maximum Pcm content for higher strength grades with low carbon content C < 0.13 %
- production statistics of the chemical composition and, if available at rolling mills, mechanical properties (ReH, Rm, A% and KV). The statistics are intended to demonstrate the capability to manufacture the steel products in accordance with the requirements.

f) Steelmaking
- steel making process and capacity of furnace/s or converter/s
- raw material used
- deoxidation and alloying practice
- desulphurisation and vacuum degassing installations, if any
- casting methods: ingot or continuous casting. In the case of continuous casting, information relevant to type of casting machine, teeming practice, methods to prevent re-oxidation, inclusions and segregation control, presence of electromagnetic stirring, soft reduction, etc., is to be provided as appropriate.
- ingot or slab size and weight
- ingot or slab treatment: scarfing and discarding procedures

g) Approval already granted by other Classification Societies and documentation of approval tests performed.

2.2 Documents to be submitted for changing the approval conditions

The manufacturer has to submit to the Society the documents required in 2.1 together with the request of changing the approval conditions, in the case of the following a) through c):

a) Change of the manufacturing process (steel making process, casting method, steel making plant, caster)
b) Change of the thickness range (dimension)
c) Change of the chemical composition, added element, etc.

However, where the documents are duplicated by the ones at the previous approval for the same type of product, part or all of the documents may be omitted except the approval test program (see 3.1).

3. Approval tests

3.1 Extent of the approval tests

The extent of the test program is specified in 3.6, it may be modified on the basis of the preliminary information submitted by the manufacturer.

In particular a reduction of the indicated number of casts, product thicknesses and types to be tested or complete suppression of the approval tests may be accepted by the Society taking into account:

a) Approval already granted by other Classification Societies and documentation of approval tests performed.

b) Types of steel to be approved and availability of long term statistic results of chemical properties and of mechanical tests performed on rolled products.
c) Change of the approval conditions.

On the other hand, an increase of the number of casts and thicknesses to be tested may be required in the case of newly developed types of steel or manufacturing processes.

3.2 Approval test program

Where the number of tests differs from those shown in 3.6, the program is to be confirmed by the Society before the tests are carried out.

3.3 Approval survey

The approval tests are to be witnessed by the Surveyor at the manufacturer's plant and the execution of the plant inspection in operation may be required by the Surveyor during the visit for the approval.

If the testing facilities are not available at the works, the tests are to be carried out at recognized laboratories.

3.4 Selection of the test product

For each type of steel and for each manufacturing process (e.g. steel making, casting), one test product with the maximum thickness and one test product with the minimum thickness to be approved are in general to be selected for each kind of product (ingots, slabs, blooms/billets).

The selection of the casts for the test product is to be based on the typical chemical composition, with particular regard to the specified Ceq or Pcm values and grain refining micro-alloying additions.

3.5 Position of the test samples

The test samples are to be taken, unless otherwise agreed, from the product (slabs, blooms, billets) corresponding to the top of the ingot, or, in the case of continuous casting, a random sample.

3.6 Tests on base material

3.6.1 Type of tests

The tests to be carried out for the approval of the manufacturing process of semi-finished products are:

- Chemical analysis. The analysis is to be complete and is to include micro alloying elements.
- Sulphur prints.

In addition, for initial approval and for any upgrade of the approval, the Society will require full tests indicated in Appendix A2.3 to be performed at rolling mill on the minimum thickness semi finished product.

In case of a multi-caster work, full tests on finished products shall be carried out for one caster and reduced tests (chemical analysis and sulphur print) for the others. The selection of

W11
(cont)

the caster shall be based on the technical characteristics of the casters to be evaluated on case by case basis to be performed at rolling mill on products manufactured from the minimum thickness semi finished product.

3.6.2 Test specimens and testing procedure

The following tests and procedures apply:

a) Chemical analyses
Both the ladle and product analyses are to be reported. In general the content of the following elements is to be checked: C, Mn, Si, P, S, Ni, Cr, Mo, Al, N, Nb, V, Cu, As, Sn, Ti and, for steel manufactured from electric or open-hearth furnace, Sb and B.

b) Sulphur prints are to be taken from product edges which are perpendicular to the axis of the ingot or slab. These sulphur prints are to be approximately 600 mm long taken from the centre of the edge selected, i.e. on the ingot centreline, and are to include the full product thickness.

4. Results

All the results, which are in any case to comply with the requirements of the Rules, are evaluated for the approval; depending on the results, particular limitations or testing conditions, as deemed appropriate, may be specified in the approval document.

All the information required under Appendix A2.2, applicable to the products submitted to the tests, is to be collected by the manufacturer and put in the dossier which will include all the results of the tests and operation records relevant to steel making, casting and, when applicable, rolling and heat treatment of the test products.

5. Certification

5.1 Approval

Upon satisfactory completion of the survey, approval is granted by the Society.

On the approval certificate the following information is to be stated:

- Type of products (ingots, slabs, blooms, billets)
- Steelmaking and casting processes
- Thickness range of the semi-finished products
- Types of steel (normal or higher strength)

It is also to be indicated that the individual users of the semi finished products are to be approved for the manufacturing process of the specific grade of rolled steel products they are going to manufacture with those semi finished products.

5.2 List of approved manufacturers

The approved manufacturers are entered in a list containing the types of steel and the main conditions of approval.

W11
(cont)

6. Renewal of approval

The validity of the approval is to be a maximum of five years.

Renewal can be carried out by an audit and assessment on the result of satisfactory survey during the period*. Where for operational reasons, the renewal audit falls outside the period of approval, the manufacturer will still be considered as approved if agreement to this audit date is made within the original period of approval, in this instance if successful, the extension of approval will be back dated to the original renewal date.

Manufacturers who have not produced the approved grades and products during the period between renewals may be required to either carry out approval tests or, on the basis of results of production of similar grades of products, at the discretion of the Society, be re-approved.

7. Reconsideration of the approval

During the period of validity the approval may be reconsidered in the following cases:

a) in service failures, traceable to product quality

b) non conformity of the product revealed during fabrication and construction

c) discovered failure of the Manufacturer's quality system

d) changes brought by the Manufacturer, without preliminary agreement of the Society, to the extent of the approval defined at the time of the approval

e) evidence of major non conformities during testing of the products.

* The provision for renewal of approval is also to be applied to all grades and products which were approved by the Society prior to an implementation of revision 4 of this UR W 11 regardless of the validity of certificate in existing approvals. Such renewal is to be completed within five years after the revision 4 becomes effective.

W11
(cont)

A2. Manufacturing Approval Scheme of Hull Structural Steels

1. Scope of application

This document specifies, as given in W11.2.1, the scheme for the approval of the manufacturing process of normal and higher strength hull structural steels.

The manufacturing approval scheme is valid for verifying the manufacturer's capability to provide satisfactory products stably under effective process and production controls in operation including programmed rolling, which is required in W11.2.2 and W11.3.3.

2. Approval application

2.1 Documents to be submitted

The manufacturer has to submit to the Society, request of approval, proposed approval test program (see 3.1) and general information relevant to:

a) Name and site address of the manufacturer, location of the workshops, general indications relevant to the background, dimension of the works, estimated total annual production of finished products for shipbuilding and for other applications, as deemed useful.

b) Organization and quality:
- organizational chart
- staff employed
- staff employed and organization of the quality control department
- qualification of the personnel involved in activities related to the quality of the products
- certification of compliance of the quality system with IS0 9001 or 9002, if any
- approval certificates already granted by other Classification Societies, if any

c) Manufacturing facilities
- flow chart of the manufacturing process
- origin and storage of raw materials
- storage of finished products
- equipment for systematic control during fabrication

d) Details of inspections and quality control facilities
- details of system used for identification of materials at the different stages of manufacturing
- equipment for mechanical tests, chemical analyses and metallography and relevant calibration procedures
- equipment for non destructive examinations
- list of quality control procedures

e) Type of products (plates, sections, coils), grades of steel, range of thickness and aim material properties as follows:
- range of chemical composition and aim analyses, including grain refining, micro alloying and residual elements, for the various grades of steel; if the range of chemical composition depends on thickness and supply condition, the different ranges are to be specified, as appropriate
- aim maximum carbon equivalent according to IIW formula

W11
(cont)

- aim maximum Pcm content for higher strength grades with low carbon content C < 0.13 %
- production statistics of the chemical composition and mechanical properties (ReH, Rm, A% and KV). The statistics are intended to demonstrate the capability to manufacture the steel products in accordance with the requirements.

f) Steelmaking
- steel making process and capacity of furnace/s or converter/s
- raw material used
- deoxidation and alloying practice
- desulphurisation and vacuum degassing installations, if any
- casting methods: ingot or continuous casting. In the case of continuous casting, information relevant to type of casting machine, teeming practice, methods to prevent re-oxidation, inclusions and segregation control, presence of electromagnetic stirring, soft reduction, etc., is to be provided as appropriate.
- ingot or slab size and weight
- ingot or slab treatment: scarfing and discarding procedures

g) Reheating and rolling
- type of furnace and treatment parameters
- rolling: reduction ratio of slab/bloom/billet to finished product thickness, rolling and finishing temperatures
- descaling treatment during rolling
- capacity of the rolling stands

h) Heat treatment
- type of furnaces, heat treatment parameters and their relevant records
- accuracy and calibration of temperature control devices

i) Programmed rolling
For products delivered in the controlled rolling(CR) or thermo-mechanical rolling (TM) condition, the following additional information on the programmed rolling schedules is to be given:
- description of the rolling process
- normalizing temperature, re-crystallization temperature and Ar3 temperature and the methods used to determine them
- control standards for typical rolling parameters used for the different thickness and grades of steel (temperature and thickness at the beginning and at the end of the passes, interval between passes, reduction ratio, temperature range and cooling speed of accelerated cooling, if any) and relevant method of control
- calibration of the control equipment

j) Recommendations for working and welding in particular for products delivered in the CR or TM condition
- cold and hot working recommendations if needed in addition to the normal practice used in the shipyards and workshops
- minimum and maximum heat input if different from the ones usually used in the shipyards and workshops (15 - 50 kJ/cm)

k) Where any part of the manufacturing process is assigned to other companies or other manufacturing plants, additional information required by the Society is to be included.

W11
(cont)

l) Approval already granted by other Classification Societies and documentation of approval tests performed.

2.2 Documents to be submitted for changing the approval conditions

The manufacturer has to submit to the Society the documents required in 2.1 together with the request of changing the approval conditions, in the case of the following a) through e) as applicable:

a) Change of the manufacturing process (steel making, casting, rolling and heat treatment)
b) Change of the maximum thickness (dimension)
c) Change of the chemical composition, added element, etc.
d) Subcontracting the rolling, heat treatment, etc.
e) Use of the slabs, blooms and billets manufactured by companies other than the ones verified in the approval tests.

However, where the documents are duplicated by the ones at the previous approval for the same type of product, part or all of the documents may be omitted except the approval test program (see 3.1).

3. Approval tests

3.1 Extent of the approval tests

The extent of the test program is specified in 3.6 and 3.7; it may be modified on the basis of the preliminary information submitted by the manufacturer.

In particular a reduction of the indicated number of casts, steel plate thicknesses and grades to be tested or complete suppression of the approval tests may be accepted by the Society taking into account:

a) Approval already granted by other Classification Societies and documentation of approval tests performed
b) Grades of steel to be approved and availability of long term statistic results of chemical and mechanical properties
c) Approval for any grade of steel also covers approval for any lower grade in the same strength level, provided that the aim analyses, method of manufacture and condition of supply are similar.
d) For higher tensile steels, approval of one strength level covers the approval of the strength level immediately below, provided the steelmaking process, deoxidation and fine grain practice, casting method and condition of supply are the same.
e) Change of the approval conditions

On the other hand, an increase of the number of casts and thicknesses to be tested may be required in the case of newly developed types of steel or manufacturing processes.

In case of multi-source slabs or changing of slab manufacturer, the rolled steel manufacturer is required to obtain the approval of the manufacturing process of rolled steels using the slabs from each slab manufacturer and to conduct approval tests in accordance with 3.6 and 3.7. A reduction or complete suppression of the approval tests may considered by the Society taking into account previous approval as follows:

W11
(cont)

- the rolled steel manufacturer has already been approved for the manufacturing process using other semi finished products characterized by the same thickness, steel grade, grain refining and micro-alloying elements, steel making and casting process;
- the semi finished products manufacturer has been approved for the complete manufacturing process with the same conditions (steelmaking, casting, rolling and heat treatment) for the same steel types.

3.2 Approval test program

Where the number of tests differs from those shown in 3.6 and 3.7, the program is to be confirmed by the Society before the tests are carried out.

3.3 Approval survey

The approval tests are to be witnessed by the Surveyor at the manufacturer's plant and the execution of the plant inspection in operation may be required by the Surveyor during the visit for the approval.

If the testing facilities are not available at the works, the tests are to be carried out at recognised laboratories.

3.4 Selection of the test product

For each grade of steel and for each manufacturing process (e.g. steel making, casting, rolling and condition of supply), one test product with the maximum thickness (dimension) to be approved is in general to be selected for each kind of product.

In addition, for initial approval, the Society will require selection of one test product of average thickness.

The selection of the casts for the test product is to be based on the typical chemical composition, with particular regard to the specified Ceq or Pcm values and grain refining micro-alloying additions.

3.5 Position of the test samples

The test samples are to be taken, unless otherwise agreed, from the product (plate, flat, section, bar) corresponding to the top of the ingot, or, in the case of continuous casting, a random sample.

The position of the samples to be taken in the length of the rolled product, "piece" defined in W11.12.1 (a), (top and/or bottom of the piece) and the direction of the test specimens with respect to the final direction of rolling of the material are indicated in Table 1.

The position of the samples in the width of the product is to be in compliance with W11.12.2 (d).

3.6 Tests on base material

3.6.1 Type of tests

The tests to be carried out are indicated in the following Table 1.

W11 (cont)

Table 1 Tests on base material

Type of test	Position of the samples and direction of the test specimens (1)	Remarks			
Tensile test	Top and bottom transverse (2)	ReH, Rm, A_5(%), RA(%) are to be reported			
Tensile test (stress relieved) only for TM steels	Top and bottom transverse (2)	Stress relieving at 600 °C (2 min/mm with minimum 1 hour)			
Impact tests (3) on non aged specimens for grades:	Top and bottom - longitudinal	Testing temperature (°C)			
A, B, A32, A36, A40		+20	0	-20	
D, D32, D36, D40		0	-20	-40	
E, E32, E36, E40		0	-20	-40	-60
F32, F36, F40		-20	-40	-60	-80
A, B, A32, A36, A40	Top - transverse (4)	+20	0	-20	
D, D32, D36, D40		0	-20	-40	
E, E32, E36, E40		-20	-40	-60	
F32, F36, F40		-40	-60	-80	
Impact test (3) on strain aged specimens (5) for grades:	Top - longitudinal	Testing temperature (°C)			
A32, A36, A40		+20	0	-20	
D, D32, D36, D40		0	-20	-40	
E, E32, E36, E40		-20	-40	-60	
F32, F36, F40		-40	-60	-80	
Chemical analyses (6)	Top	Complete analyses including micro alloying elements			
Sulphur prints	Top				
Micro examination	Top				
Grain size determination	Top	only for fine grain steels			
Drop weight test (4)	Top	only for grades E, E32, E36, E40, F32, F36, F40			
Through thickness tensile tests	Top and bottom	only for grades with improved through thickness properties			

1) For hot rolled strips see 3.6.2.
2) Longitudinal direction for sections and plates having width less than 600 mm.
3) One set of 3 Charpy V-notch impact specimens is required for each impact test.
4) Not required for sections and plates having width less than 600 mm.
5) Deformation 5% + 1 hour at 250°C.
6) Besides product analyses, ladle analyses are required.

3.6.2 Test specimens and testing procedure

The test specimens and testing procedures are to be, as a rule, in accordance with W2.

In particular the following applies:

a) Tensile test
- for plates made from hot rolled strip one additional tensile specimen is to be taken from the middle of the strip constituting the coil.
- for plates having thickness higher than 40 mm, when the capacity of the available testing machine is insufficient to allow the use of test specimens of full thickness, multiple flat specimens, representing collectively the full thickness, can be used.

Alternatively two round specimens with the axis located at one quarter and at mid-thickness can be taken.

b) Impact test
- for plates made from hot rolled strip one additional set of impact specimens is to be taken from the middle of the strip constituting the coil.
- for plates having thickness higher than 40 mm one additional set of impact specimens is to be taken with the axis located at mid-thickness.
- in addition to the determination of the energy value, also the lateral expansion and the percentage crystallinity are to be reported.

c) Chemical analyses
Both the ladle and product analyses are to be reported. The material for the product analyses should be taken from the tensile test specimen. In general the content of the following elements is to be checked: C, Mn, Si, P, S, Ni, Cr, Mo, Al, N, Nb, V, Cu, As, Sn, Ti and, for steel manufactured from electric or open-hearth furnace, Sb and B.

d) Sulphur prints are to be taken from plate edges which are perpendicular to the axis of the ingot or slab. These sulphur prints are to be approximately 600 mm long taken from the centre of the edge selected, i.e. on the ingot centreline, and are to include the full plate thickness.

e) Micrographic examination: the micrographs are to be representative of the full thickness. For thick products in general at least three examinations are to be made at surface, one quarter and mid-thickness of the product.

All photomicrographs are to be taken at x100 magnification and where ferrite grain size exceeds ASTM 10, additionally at x500 magnification. Ferrite grain size should be determined for each photomicrograph.

f) Drop weight test: the test is to be performed in accordance with ASTM E208. The NDTT is to be determined and photographs of the tested specimens are to be taken and enclosed with the test report.

g) Through thickness tensile test: the test is to be performed in accordance with W14. The test results are to be in accordance, where applicable, with the requirements specified for the different steel grades in W11.

3.6.3 Other tests

Additional tests such as CTOD test, large scale brittle fracture tests (Double Tension test, ESSO test, Deep Notch test, etc.) or other tests may be required in the case of newly developed type of steel, outside the scope of W11, or when deemed necessary by the Society.

3.7 Weldability tests

3.7.1 General

Weldability tests are required for plates and are to be carried out on samples of the thickest plate. Tests are required for normal strength grade E and for higher strength steels.

3.7.2 Preparation and welding of the test assemblies

The following tests are in general required:

W11 (cont)

a) 1 butt weld test assembly welded with a heat input approximately 15 kJ/cm
b) 1 butt weld test assembly welded with a heat input approximately 50 kJ/cm.

The butt weld test assemblies are to be prepared with the weld seam transverse to the plate rolling direction, so that impact specimens will result in the longitudinal direction.
The bevel preparation should be preferably 1/2V or K.
The welding procedure should be as far as possible in accordance with the normal welding practice used at the yards for the type of steel in question.
The welding parameters including consumables designation and diameter, pre-heating temperatures, interpass temperatures, heat input, number of passes, etc. are to be reported.

3.7.3 Type of tests

From the test assemblies the following test specimens are to be taken:

a) 1 cross weld tensile test

b) a set of 3 Charpy V-notch impact specimens transverse to the weld with the notch located at the fusion line and at a distance 2, 5 and minimum 20 mm from the fusion line. The fusion boundary is to be identified by etching the specimens with a suitable reagent. The test temperature is to be the one prescribed for the testing of the steel grade in question.

c) Hardness tests HV 5 across the weldment. The indentations are to be made along a 1 mm transverse line beneath the plate surface on both the face side and the root side of the weld as follows:

- Fusion line
- HAZ: at each 0.7 mm from fusion line into unaffected base material (6 to 7 minimum measurements for each HAZ)

The maximum hardness value should not be higher than 350 HV.

A sketch of the weld joint depicting groove dimensions, number of passes, hardness indentations should be attached to the test report together with photomacrographs of the weld cross section.

3.7.4 Other tests

Additional tests such as cold cracking tests (CTS, Cruciform, Implant, Tekken, Bead-on plate), CTOD, or other tests may be required in the case of newly developed type of steel, outside the scope of W11, or when deemed necessary by the Society.

4. Results

All the results, which are in any case to comply with the requirements of the Rules, are evaluated for the approval; depending on the results, particular limitations or testing conditions, as deemed appropriate, may be specified in the approval document.

All the information required under Appendix 2.2, applicable to the products submitted to the tests, is to be collected by the manufacturer and put in the dossier which will include all the results of the tests and operation records relevant to steel making, casting, rolling and heat treatment of the test products.

W11
(cont)

5. Certification

5.1 Approval

Upon satisfactory completion of the survey, approval is granted by the Society.

5.2 List of approved manufacturers

The approved manufacturers are entered in a list containing the types of steel and the main conditions of approval.

6. Renewal of approval

The validity of the approval is to be a maximum of five years.

Renewal can be carried out by an audit and assessment on the result of satisfactory survey during the period.*

Where for operational reasons, the renewal audit falls outside the period of approval, the manufacturer will still be considered as approved if agreement to this audit date is made within the original period of approval, in this instance if successful, the extension of approval will be back dated to the original renewal date.

Manufacturers who have not produced the approved grades and products during the period between renewals may be required to either carry out approval tests or, on the basis of results of production of similar grades of products, at the discretion of the Society, be reapproved.

7. Reconsideration of the approval

During the period of validity the approval may be reconsidered in the following cases:

a) in service failures, traceable to product quality

b) non conformity of the product revealed during fabrication and construction

c) discovered failure of the Manufacturer's quality system

d) changes brought by the Manufacturer, without preliminary agreement of the Society, to the extent of the approval defined at the time of the approval

e) evidence of major non conformities during testing of the products.

---

* The provision for renewal of approval is also to be applied to all grades and products which were approved by the Society prior to an implementation of revision 4 of this UR W 11 regardless of the validity of certificate in existing approvals. Such renewal is to be completed within five years after the revision 4 becomes effective.

W11
(cont)

Appendix B. Approval scheme for manufacturer of hull structural steels intended for welding with high heat input

1. Scope

This document specifies the weldability confirmation scheme of normal and higher strength hull structural steels stipulated in UR W11 intended for welding with high heat input over 50kJ/cm.

The weldability confirmation scheme is to be generally applied by manufacturer's option and valid for certifying that the steel has satisfactory weldability for high heat input welding concerned under testing conditions.

Demonstration of conformance to the requirements of this document approves a particular steel mill to manufacture grade of steel to the specific chemical composition range, melting practice, and processing practice for which conformance was established. The approval scheme does not apply to qualification of welding procedures to be undertaken by the shipyards.

2. Application of certification

The manufacturer is to submit to the Classification Society, request of certification, proposed weldability test program (see section 3.2) and technical documents relevant to:

a) Outline of steel plate to be certified
   - grade
   - thickness range
   - deoxidation practice
   - fine grain practice
   - aim range of chemical composition
   - aim maximum Ceq and Pcm
   - production statistics of mechanical properties (tensile and Charpy V-notch impact tests), if any

b) Manufacturing control points to prevent toughness deterioration in heat affected zone when welded with high heat input, relevant to chemical elements, steel making, casting, rolling, heat treatment etc.

c) Welding control points to improve joint properties on strength and toughness, if any.

3. Confirmation tests

3.1 Range of certification

Range of certification for steel grades is to be the following a) through e) unless otherwise agreed by the Classification Society:

a) Approval tests on the lowest and highest toughness levels cover the intermediate toughness level.
b) Approval tests on normal strength level cover that strength level only.

c) For high tensile steels, approval tests on one strength level cover strength level immediately below.
d) Tests may be carried out separately subject to the same manufacturing process.
e) Certification and documentation of confirmation tests performed by other Classification Society may be accepted at the discretion of the Classification Society.

3.2 Weldability test program

Extent of the test program is specified in section 3.5 but it may be modified according to the contents of certification. In particular, additional test assemblies and/or test items may be required in the case of newly developed type of steel, welding consumable and welding method, or when deemed necessary by the Classification Society.

Where the content of tests differs from those specified in section 3.5, the program is to be confirmed by the Classification Society before the tests are carried out.

3.3 Test plate

Test plate is to be manufactured by a process approved by the Classification Society in accordance with the requirements of UR W11 Appendix A.

For each manufacturing process route, two test plates with different thickness are to be selected. The thicker plate (t) and thinner plate (less than or equal to t/2) are to be proposed by the manufacturer.

Small changes in manufacturing processing (e.g. within the TMCP process) may be considered for acceptance without testing, at the discretion of the Classification Society.

3.4 Test assembly

One butt weld assembly welded with heat input over 50kJ/cm is to be generally prepared with the weld axis transverse to the plate rolling direction.

Dimensions of the test assembly are to be amply sufficient to take all the required test specimens specified in section 3.5.

The welding procedures should be as far as possible in accordance with the normal practices applied at shipyards for the test plate concerned.

Welding process, welding position, welding consumable (manufacturer, brand, grade, diameter and shield gas) and welding parameters including bevel preparation, heat input, preheating temperatures, interpass temperatures, number of passes, etc. are to be reported.

3.5 Examinations and tests for the test assembly

The test assembly is to be examined and tested in accordance with the following a) through h) unless otherwise agreed by the Classification Society.

a) Visual examination
Overall welded surface is to be uniform and free from injurious defects such as cracks, undercuts, overlaps, etc.

W11 (cont)

b) Macroscopic test
One macroscopic photograph is to be representative of transverse section of the welded joint and is to show absence of cracks, lack of penetration, lack of fusion and other injurious defects.

c) Microscopic test
Along mid-thickness line across transverse section of the weld, one micrograph with x100 magnification is to be taken at each position of the weld metal centreline, fusion line and at a distance 2, 5, 10 and minimum 20 mm from the fusion line. The test result is provided for information purpose only.

d) Hardness test
Along two lines across transverse weld section 1 mm beneath plate surface on both face and root side of the weld, indentations by HV5 are to be made at weld metal centreline, fusion line and each 0.7 mm position from fusion line to unaffected base metal (minimum 6 to 7 measurements for each heat affected zone).

The maximum hardness value should not be higher than 350 HV.

e) Transverse tensile test
Two transverse (cross weld) tensile specimens are to be taken from the test assembly. Test specimens and testing procedures are to comply with the requirements of UR W2.

The tensile strength is to be not less than the minimum required value for the grade of base metal.

f) Bend test
Two transverse (cross weld) test specimens are to be taken from the test assembly and bent on a mandrel with diameter of quadruple specimen thickness. Bending angle is to be at least 120°. Test specimens are to comply with the requirements of UR W2.

For plate thickness up to 20 mm, one face-bend and one root-bend specimens or two side-bend specimens are to be taken. For plate thickness over 20 mm, two side-bend specimens are to be taken.

After testing, the test specimens shall not reveal any crack nor other open defect in any direction greater than 3 mm.

g) Impact test
Charpy V-notch impact specimens (three specimens for one set) are to be taken within 2 mm below plate surface on face side of the weld with the notch perpendicular to the plate surface.

One set of the specimens transverse to the weld is to be taken with the notch located at the fusion line and at a distance 2, 5 and minimum 20 mm from the fusion line. The fusion boundary is to be identified by etching the specimens with a suitable reagent. The test temperature is to be the one prescribed for the testing of the steel grade in question.

For steel plate with thickness greater than 50 mm or one side welding for plate thickness greater than 20 mm, one additional set of the specimens is to be taken from the root side of the weld with the notch located at each the same position as for the face side.

The average impact energy at the specified test temperature is to comply with the Tables 6 or 7 of UR W11 depending on the steel grade and thickness. Only one individual value may be below the specified average value provided it is not less than 70% of that value.

W11 (cont)

Additional tests at the different testing temperatures may be required for evaluating the transition temperature curve of absorbed energy and percentage crystallinity at the discretion of the Classification Society.

h) Other test
Additional tests such as wide-width tensile test, HAZ tensile test, cold cracking tests (CTS, Cruciform, Implant, Tekken, and Bead-on plate), CTOD or other tests should be required at the discretion of the Classification Society (see section 3.2).

4. Results

The manufacturer is to submit to the Classification Society the complete test report including all the results and required information relevant to the confirmation tests specified in section 3.

The contents of the test report are to be reviewed and evaluated by the Classification Society in accordance with this weldability confirmation scheme.

5. Certification

The Classification Society issues the certificate where the test report is found to be satisfactory.

The following information is generally required to be included on the certificate:
a) Manufacturer
b) Grade designation with notation of heat input (see section 6)
c) Deoxidation practice
d) Fine grain practice
e) Condition of supply
f) Plate thickness tested
g) Welding process
h) Welding consumable (manufacturer, brand, grade), if desired
i) Actual heat input applied.

6. Grade designation

Upon issuance of the certificate, the notation indicating the value of heat input applied in the confirmation test may be added to the grade designation of the test plate, e.g. “E36-W300” (in the case of heat input 300 kJ/cm applied). The value of this notation is to be not less than 50 and every 10 added.

W11 (cont)

Appendix C Procedure for Approval of Corrosion resistant steels for cargo oil tanks

Approval Procedure for Corrosion Resistant Steel

1. Scope

1.1 This document specifies, as given in W11 2.1, the scheme for the approval of corrosion resistant steels based upon corrosion testing.

1.2 The corrosion testing is to be carried out in addition to the approval testing specified in Appendix A1 and A2 for the approval of normal and higher strength hull structural steels.

1.3 The corrosion tests and assessment criteria are to be in accordance with the Appendix of the Annex to Performance Standard for Alternative Means of Corrosion Protection for Cargo Oil Tanks of Crude Oil Tankers (MSC.289 (87)).

2. Application for approval

2.1 The manufacturer is to submit to the Society a request for approval, which is to include the following:

(a) Corrosion test plan and details of equipment and test environments.

(b) Technical data related to product assessment criteria for confirming corrosion resistance.

(c) The technical background explaining how the variation in added and controlled elements improves corrosion resistance. The manufacturer will establish a relationship of all the chemical elements which affect the corrosion resistance. The chemical elements added or controlled to achieve the required level of corrosion resistance are to be specifically verified for acceptance. Verification is to be based on the ladle analysis of the steel.

(d) The grades, the brand name and maximum thickness of corrosion resistant steel to be approved. Designations for corrosion resistant steels are given in Table 2.1

(e) The welding processes and the brand name of the welding consumables to be used for approval.

Table 2.1 Designations for Corrosion Resistant Steels

Type of steel	Location where steel is effective	Corrosion Resistant Designation
Rolled steel for hull	For lower surface of strength deck and surrounding structures (ullage space)	RCU
	For upper surface of inner bottom plating and surrounding structures	RCB
	For both strength deck and inner bottom plating	RCW

W11
(cont)

3. Approval of test plan

3.1 The test program submitted by the manufacturer is to be reviewed by the Society, if found satisfactory, it will be approved and returned to the manufacturer for acceptance prior to tests being carried out. Tests that need to be witnessed by the society Surveyor will be identified.

3.2 Method for selection of test samples is to satisfy the following:

3.2.1 The numbers of test samples is to be in accordance with the requirements of the Appendix of the Annex to Performance Standard for Alternative Means of Corrosion Protection for Cargo Oil Tanks of Crude Oil Tankers (MSC.289 (87)).

3.2.2 The number of casts and test samples selected are to be sufficient to make it possible to confirm the validity of interaction effects and/or the control range (upper limit, lower limit) of the elements which are added or intentionally controlled, for improving the corrosion resistance. Where agreed, this may be supported with data submitted by the manufacturer.

3.2.3 Additional tests may be required by the Society when reviewing the test program against the paragraph 3.2.2

Remarks: Considerations for additional tests may include but not be limited to:

(a) When the Society determines that the control range is set by the theoretical analysis of each element based on existing data, the number of corrosion resistance tests conducted in accordance with the Appendix of the Annex to Performance Standard for Alternative Means of Corrosion Protection for Cargo Oil Tanks (MSC.289 (87)) is too few to adequately confirm the validity of the control range of chemical composition;

(b) When the Society determines that the data of the corrosion resistance test result obtained for setting the control range of chemical composition varies too widely;

(c) When the Society determines that the validity of the corrosion resistance test result for setting the control range of chemical composition is insufficient, or has some flaws; and

(d) When the Society's surveyor has not attended the corrosion resistance tests for setting the control range of chemical composition, and the Society determines that additional testing is necessary in order to confirm the validity of the test result data.

Remarks: The chemical composition of the corrosion resistant steel is to be within the range specified for rolled steel for hull. Elements to be added for improving the corrosion resistance and for which content is not specified are to be generally within 1% in total.

4. Carrying out the approval test

4.1 The manufacturer is to carry out the approval test in accordance with the approved test plan.

5. Attendance of the Society's Surveyor for Test

5.1 The Society's Surveyor is to be present, as a rule, when the test samples for the approval test are being identified and for approval tests, see also 3.1.

W11
(cont)

6. Test Results

6.1 After completion of the approval test, the manufacturer is to produce the report of the approval test and submit it to the Society.

6.2 The Society will give approval for corrosion resistant steel where approval tests are considered by the society to have given satisfactory results based on the data submitted in accordance with the provisions of this Appendix.

6.3 The certificate is to contain the manufacturer's name, the period of validity of the certificate, the grades and thickness of the steel approved, welding methods and welding consumables approved.

7. Assessment Criteria for Results of Corrosion Resistance Tests of Welded Joint

7.1 The results will be assessed by the Classification Society in accordance with the acceptance criteria specified in the Appendix of the Annex to Performance Standard for Alternative Means of Corrosion Protection for Cargo Oil Tanks (MSC.289 (87)).

End of Document

W12 Deleted

W13 Thickness tolerances of steel plates and wide flats

(1981) (Rev.1 1989) (Rev.2 1992) (Rev.3 1995) (Rev.4 Oct 2009) (Rev.5 Feb 2012) (Corr.1 May 2012) (Rev.6 June 2018) (Rev.7 Sep 2021)

W13.1 Scope

W13.1.1 These requirements apply to the tolerance on thickness of steel plates and wide flats with widths of 600 mm or greater (hereinafter referred to as: product or products) with thicknesses of 5 mm and over, covering the following steel grades:

(i) Normal and higher strength hull structural steels according to UR W11

(ii) High strength steels for welded structures according to UR W16

(iii) Steels for machinery structures in accordance with the individual Rules of Classification Societies

The thickness tolerances for products below 5 mm are to be in accordance with a national or international standard, e.g. Class B of ISO 7452:2013. However, the minus tolerance shall not exceed 0.3mm.

NOTE:
Tolerances for length, width, flatness and over thickness may be taken from national or international standards.

W13.1.2 These requirements do not apply to products intended for the construction of lifting appliances which are subject to decision by the Classification Society.

W13.1.3 These requirements do not apply to products intended for the construction of boilers, pressure vessels and independent tanks, e.g. for the transportation of liquefied gases or chemicals.

Note:

1. Rev.4 of this UR is to be uniformly implemented by IACS Societies on ships contracted for construction on or after 1 January 2011 and when the application for certification of steel plates is dated on or after 1 January 2011.

2. The “contracted for construction” date means the date on which the contract to build the vessel is signed between the prospective owner and the shipbuilder. For further details regarding the date of “contract for construction”, refer to IACS Procedural Requirement (PR)No. 29.

3. Rev.5 of this UR is to be uniformly implemented by IACS Societies on ships contracted for construction on or after 1 January 2013 and when the application for certification of steel plates is dated on or after 1 January 2013.

4. Rev.6 of this UR is to be uniformly implemented by IACS Societies on ships contracted for construction on or after 1 July 2019.

5. Rev.7 of this UR is to be uniformly implemented by IACS Societies on ships contracted for construction on or after 1 January 2023.

W13 (cont)

W13.1.4 Class C of ISO 7452:2013 or equivalent according to national or international standards may be applied in lieu of W13.3, in which case the requirements in W13.4 and W13.5 need not be applied.

Additionally, if Class C of ISO 7452:2013 is applied, it is required that the steel mill demonstrates to the satisfaction of the Classification Society that the number of measurements and measurement distribution is appropriate to establish that the mother plates produced are at or above the specified nominal thickness.

W13.2 Responsibility

W13.2.1 The responsibility for verification and maintenance of the production within the required tolerances rests with the manufacturer. The Surveyor may require to witness some measurements.

W13.2.2 The responsibility for storage and maintenance of the delivered product(s) with acceptable level of surface conditions rests with the fabricator before the products are used in fabrication.

W13.3 Thickness tolerances

W13.3.1 The tolerances on thickness of a given product are defined as:

- Minus tolerance is the lower limit of the acceptable range below the nominal thickness.
- Plus tolerance is the upper limit of the acceptable range above the nominal thickness.

NOTE:
Nominal thickness is stated by the purchaser at the time of enquiry and order.

W13.3.2 The minus tolerance on nominal thickness of products in accordance with UR W11 and UR W16 is 0.3 mm irrespective of nominal thickness.

W13.3.3 The minus tolerances for products for machinery structures are to be in accordance with Table 1.

Table 1 Minus tolerances on nominal thickness for products for machinery structures

Nominal thickness (t) (mm)	Minus tolerance on nominal thickness (mm)
$3 \le t < 5$	-0.3
$5 \le t < 8$	-0.4
$8 \le t < 15$	-0.5
$15 \le t < 25$	-0.6
$25 \le t < 40$	-0.7
$40 \le t < 80$	-0.9
$80 \le t < 150$	-1.1
$150 \le t < 250$	-1.2
$t \ge 250$	-1.3

W13 (cont)

W13.3.4 The tolerances on nominal thickness are not applicable to areas repaired by grinding. For areas repaired by grinding the IACS UR W11 7.4.1 requirements are to be applied, unless stricter requirements as per a recognized standard are considered by the Classification Society or purchaser.

W13.3.5 The plus tolerances on nominal thickness are to be in accordance with a recognized national or international standard unless required otherwise by the Classification Society or purchaser.

W13.4 Average thickness

W13.4.1 The average thickness of products is defined as the arithmetic mean of the measurements made in accordance with the requirements of W13.5.

W13.4.2 The average thickness of products in accordance with URs W11 or W16 is not to be less than the nominal thickness.

W13.5 Thickness measurements

W13.5.1 The thickness is to be measured at locations of products as defined in Annex.

W13.5.2 Automated method or manual method is applied to the thickness measurements.

W13.5.3 The procedure and the records of measurements are to be made available to the Surveyor and copies provided on request.

W13
(cont)

ANNEX: Thickness Measuring Locations

A.1 Scope of application

This Annex applies to the thickness measuring locations for the thickness tolerance and the average thickness of the product.

A.2 Measuring locations

At least two lines among Line 1, Line 2 or Line 3 as shown in Figure A.1, are to be selected for the thickness measurements and at least three points on each selected line as shown in Figure A.1 are to be selected for thickness measurement. If more than three points are taken on each line the number of points shall be equal on each line.

NOTE:
The measurement locations apply to a product rolled directly from one slab or steel ingot even if the product is to be later cut by the manufacturer. Examples of the original measurements relative to later cut products are shown in Figure A.2. It is to be noted that the examples shown are not representative of all possible cutting scenarios.

For automated methods, the measuring points at sides are to be located not less than 10 mm but not greater than 300 mm from the transverse or longitudinal edges of the product.

For manual methods, the measuring points at sides are to be located not less than 10 mm but not greater than 100 mm from the transverse or longitudinal edges of the product.

Figure A.1 - Locations of Thickness Measuring Points for the Original Steel Plates

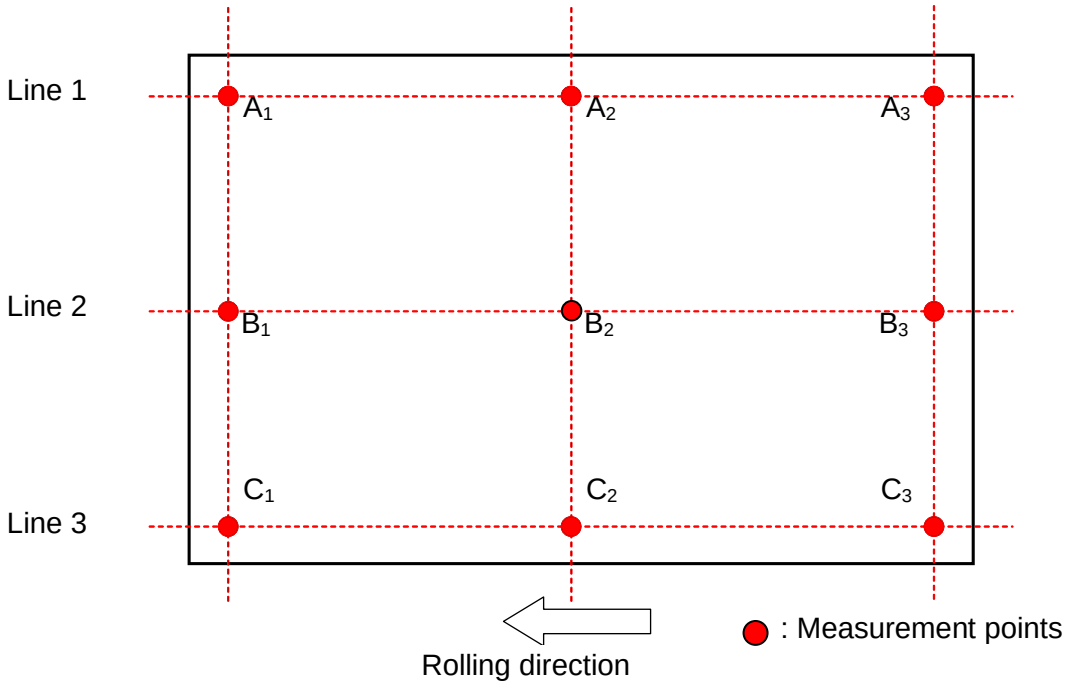

W13
(cont)

Figure A.2 - Locations of Thickness Measuring Points for the Cut Steel Products

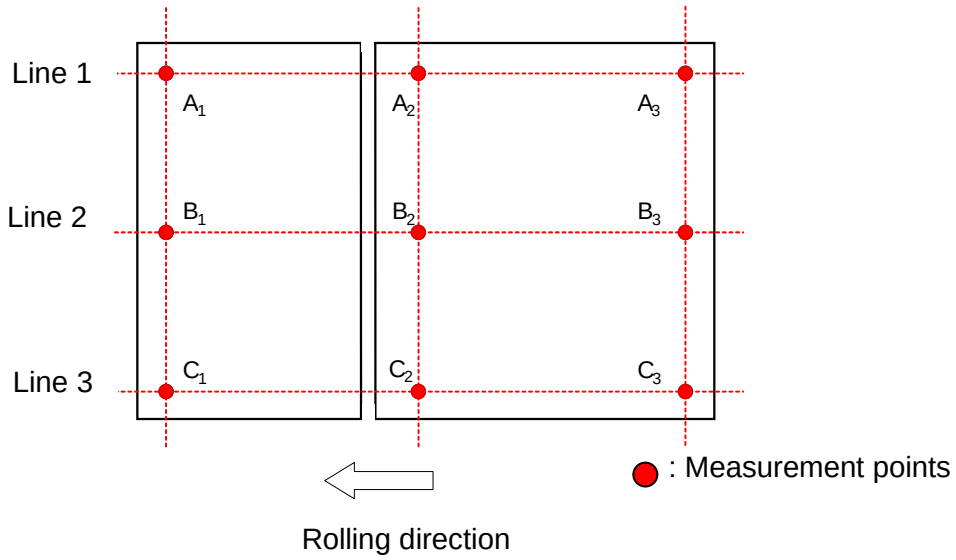

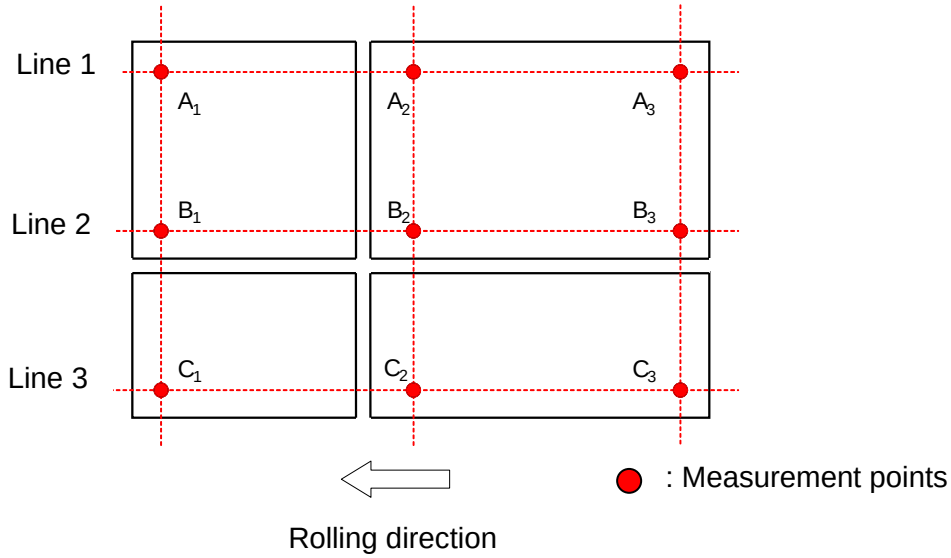

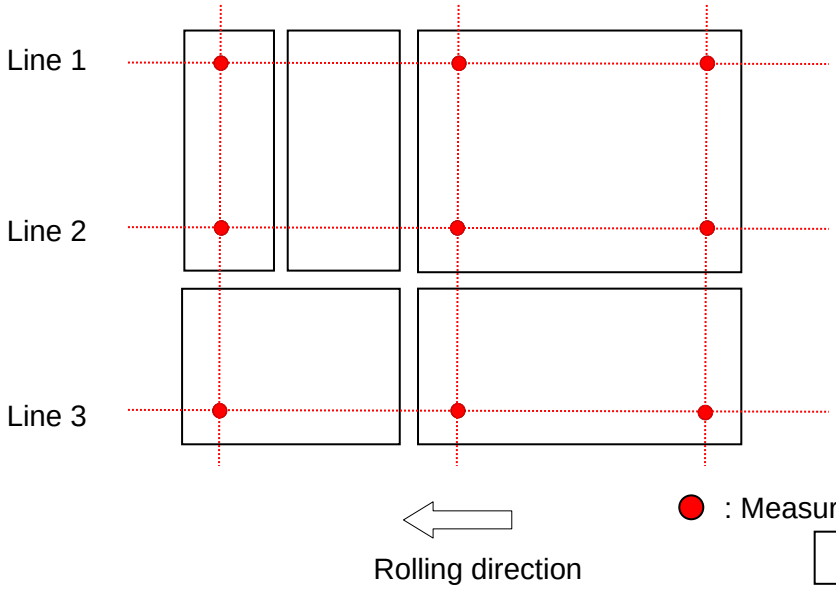

End of Document

W15 Deleted

◀◀

W14 Steel plates and wide flats with specified minimum through thickness properties (“Z” quality)

(1982)
(Rev.1 July 2002)
(Rev.2 May 2004)
(Rev.3 Sep 2021)

W14.1 Scope

These requirements supplement those given in W11 and W16 for material with a thickness greater than or equal to 15mm and intended to have a specified minimum ductility in the through thickness or "Z" direction (Figure 1). Products with a thickness less than 15mm may be included at the discretion of the Society.

The use of such material, known as "Z" quality steel, is recommended for structural details subject to strains in the through thickness direction to minimise the possibility of lamellar tearing during fabrication. Two "Z" quality steels are specified, Z25 for normal ship applications and Z35 for more severe applications.

Through thickness properties are characterised by specified values for reduction of area in a through thickness tensile test.

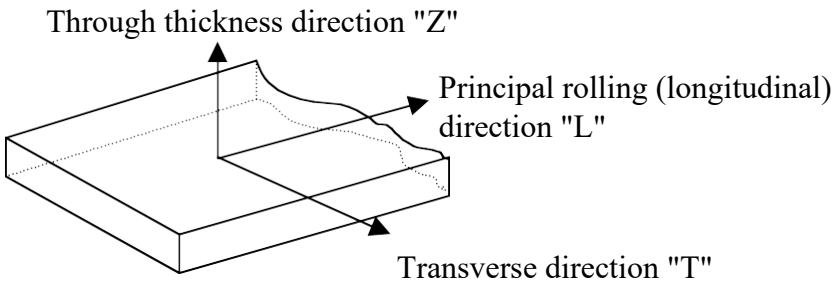

Figure 1 Schematic of testing directions

Note:

1. Changes introduced in Rev.3 are to be uniformly implemented by IACS Societies on ships contracted for construction on or after 1 January 2023 and when the application for certification of steel plates is dated on or after 1 January 2023.

2. The “contracted for construction” date means the date on which the contract to build the vessel is signed between the prospective owner and the shipbuilder. For further details regarding the date of “contract for construction”, refer to IACS Procedural Requirement (PR) No. 29.

W14 (cont)

W14.2 Manufacture

All the materials are to be manufactured at works approved by the Society for "Z" quality steels.

The approval should follow the procedure given in UR W11 Appendix A but take into account the improved steelmaking techniques of calcium treatment, vacuum degassing and argon stirring as well as the control of centre-line segregation during continuous casting.

W14.2 *bis* Chemical composition

In addition to the requirements of the appropriate steel specification W11 or W16, the maximum sulphur content is to be 0.008% determined by the ladle analysis.

W14.3 Test procedure

In addition to the requirements of the appropriate steel specification W11 or W16, preparation of specimens and testing procedures are to be as follows:

W14.3.1 Test sampling

For plates and wide flats, one test sample is to be taken close to the longitudinal centreline of one end of each rolled piece representing the batch. See Table 1 and Figure 2.

Table 1 Batch size dependent on product and sulphur content

Product	S > 0.005%	S ≤ 0.005%
Plates	Each piece(parent plate)	Maximum 50t of products of the same cast, thickness and heat treatment
Wide flats of normal thickness ≤ 25mm	Maximum 10t of products of the same cast, thickness and heat treatment	Maximum 50t of products of the same cast, thickness and heat treatment
Wide flats of nominal thickness >25mm	Maximum 20t of products of the same cast, thickness and heat treatment	Maximum 50t of products of the same cast, thickness and heat treatment

W14.3.2 Number of tensile test specimens

The test sample must be large enough to accommodate the preparation of 6 specimens. 3 test specimens are to be prepared while the rest of the sample remains for possible retest.

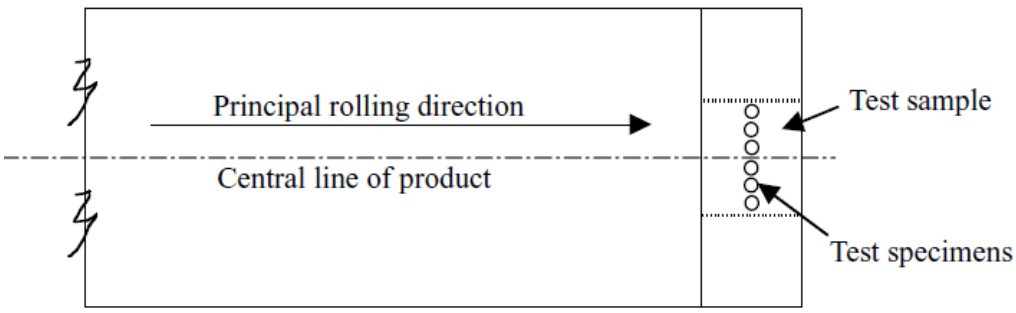

Figure 2 Plate and wide flat sampling position

W14 (cont)

W14.3.3 Tensile test specimen dimensions

Round test specimens including built-up type by welding are to be prepared in accordance with a recognised national standard.

W14.3.4 Tensile test results

The test is considered invalid and further replacement test is required if the fracture occurs in the weld or heat affected zone.

The minimum average value for the reduction of area of at least 3 tensile test specimens taken in the through thickness direction must be that shown for the appropriate grade given in Table 2. Only one individual value may be below the minimum average but not less than minimum individual value shown for the appropriate grade. See Figure 3.

A value less than the minimum individual value is a cause for rejection.

Table 2 Reduction of area acceptance values

Grad	Z25	Z35
Minimum average	25%	35%
Minimum individual	15%	25%

W14.4 Retest procedure

Figure 3 shows the three cases where a retest situation is permitted. In these instances three more tensile tests are to be taken from the remaining test sample. The average of all 6 tensile tests is to be greater than the required minimum average with no greater than two results below the minimum average.

In the case of failure after retest, either the batch represented by the piece is rejected or each piece within the batch is required to be tested.

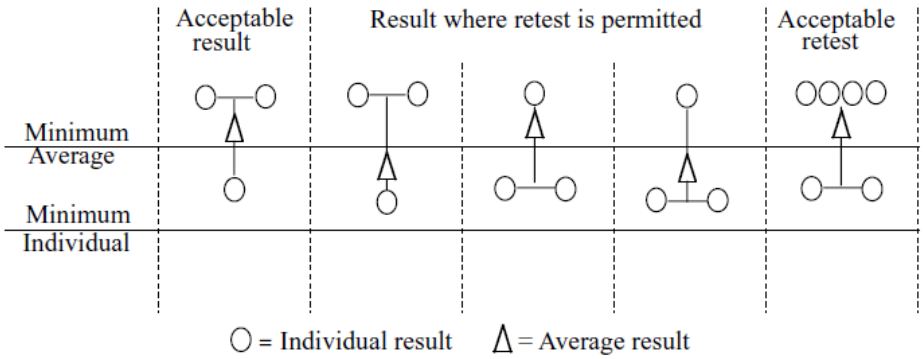

Figure 3 Diagram showing acceptance / rejection and retest criteria

W14 (cont)

W14.5 Ultrasonic tests

Ultrasonic testing is required and is to be performed in accordance with either EN 10160:1999 Level S1/E1 or ASTM A 578:2017 Level C.

Ultrasonic testing should be carried out on each piece in the final supply condition and with a probe frequency of 4MHz.

W14.6 Marking

Products complying with these requirements are to be marked in accordance with the appropriate steel requirement W11 or W16 and in addition with the notation Z25 or Z35 added to the material grade designation, e.g. EH36Z25 or EH36Z35.

W14.7 Certification

The following information is required to be included on the certificate in addition to the appropriate steel requirement given in W11 or W16:

(a) Through thickness reduction in area (%)
(b) Steel grade with Z25 or Z35 notation.

End of Document

W16 High Strength Steels for Welded Structures

(1984) (Rev.1 1994) (Rev.2 May 2004) (Rev.3 Mar 2016 Complete Revision)

1. Scope

1.1 These requirements apply to hot-rolled, fine-grain, weldable high strength structural steels, intended for use in marine and offshore structural applications. These requirements do not apply to steels intended for hull structure of commercial ships whose requirements are specified in Unified Requirement W11.

1.2 Steels covered by the scope of these requirements are specified in yield strength levels of 420, 460, 500, 550, 620, 690, 890 and 960 N/mm^2. For each yield strength level grades A, D, E and F are specified, based on the impact test temperature, except for yield strength level of 890 and 960 N/mm^2 for which grade F is not applicable.

The full list of grades are:

AH420	DH420	EH420	FH420
AH460	DH460	EH460	FH460
AH500	DH500	EH500	FH500
AH550	DH550	EH550	FH550
AH620	DH620	EH620	FH620
AH690	DH690	EH690	FH690
AH890	DH890	EH890	
AH960	DH960	EH960	

1.3 Steels covered by the scope may be delivered in Normalized (N)/Normalised rolled (NR); Thermo-mechanical controlled rolled (TM) or Quenched and Tempered (QT) condition.

Note:
TM is a generic delivery condition that may or may not include accelerated cooling, and may or may not include direct quenching followed by tempering after TM-rolling.

1.4 Product forms include plates, wide flats, sections, bars and seamless tubulars.

Note:

1. This UR is to be uniformly implemented by IACS Societies in marine and offshore structures contracted for construction on or after 1 July 2017, or when the application for certification of steel products submitted by an approved manufacturer is dated on or after 1 July 2017, or the application for certification of manufacturer approval is dated on or after 1 July 2017.

2. The “contracted for construction” date means the date on which the contract to build the vessel is signed between the prospective owner and the shipbuilder. For further details regarding the date of “contract for construction”, refer to IACS Procedural Requirement (PR) No. 29.

W16 (cont)

1.5 Steels with a thickness beyond the maximum thicknesses as given in Table 3 of section 5.3 may be approved at the discretion of the Classification Society.

1.6 Steels differing in chemical composition, deoxidation practice, delivery condition and mechanical properties may be accepted, subject to the special approval of the Classification Society. Such steels are to be given a special designation.

2. Approval

2.1 For applications subjected to Classification, all steels are to be manufactured at steel works which have been approved by the Classification Society for the type and grade of steel which is being supplied. The procedure for approval is shown in Appendix A.

2.2 It is the steelmaker's responsibility to assure that effective quality, process and production controls during manufacturing are adhered to within the manufacturing specification. The manufacturing specification shall be submitted to the Classification Society at the time of initial approval.

2.3 Where non-conformities arise, the manufacturer is to identify the root cause and establish countermeasures to prevent its recurrence. The non-conformities and the countermeasures are to be documented and reported to the Classification Society.

2.4 When the semi-finished products were not manufactured by the approved manufacturer of the finish rolled and heat treated products, the manufacturer of the semi-finished product shall also be subject to approval by Classification Society.

Note 1:
The attention of the users must be drawn to the fact that when fatigue loading is present, the effective fatigue strength of a welded joint of high strength steel may not be greater than that of a welded joint in normal strength steels.

Note 2:
Before subjecting steels produced by both thermo-mechanical rolling or quenched and tempered after rolling to further heating for forming or stress relieving, or using high heat-input welding, special consideration must be given to the possibility of a consequent reduction in mechanical properties.

3. Method of Manufacture

3.1 Steel making process

3.1.1 The steel is to be manufactured, by the basic oxygen, basic electric arc furnace or by processes specially approved by the Classification Society.

3.1.2 Vacuum degassing shall be used for any of the following:

a) All steels with enhanced through-thickness properties, and

b) All steels of grade H690, H890 and H960.

3.2 Deoxidation

3.2.1 The steel is to be fully killed.

W16 (cont)

3.3 Grain size

3.3.1 The steel is to be fine grain treated, and is to have a fine grain structure. The fine grain practice is to be as detailed in the manufacturing specification.

Note:
A fine grain structure has an equivalent index ≥ 6 determined by micrographic examination in accordance with ISO 643 or alternative test method.

3.4 Nitrogen control

3.4.1 The steels shall contain nitrogen binding elements as detailed in the manufacturing specification. Also see note 4 in Table 1.

4. Chemical Composition

4.1 The chemical composition is to be determined by the steelmaker in an adequately equipped and competently staffed laboratory. The method of sampling is to follow that carried out for the initial approval tests, either from the ladle, the tundish or the mould in the case of continuous casting. The aim analysis is to be in accordance with the manufacturing specification. All the elements listed in Table 1 are to be reported.

4.2 Elements used for alloying, nitrogen binding, and fine grain treatment, and as well as the residual elements are to be as detailed in the manufacturing specification, e.g. when boron is deliberately added for enhancement of hardenability of the steels, the maximum content of the boron content shall not be higher than 0.005%; and the analysis result shall be reported.

4.3 The carbon equivalent value is to be calculated from the ladle analysis. Maximum values are specified in Table 2.

a) For all steel grades the following formula of IIW may be used:

$$Ceq = C + \frac{Mn}{6} + \frac{Cr + Mo + V}{5} + \frac{Ni + Cu}{15} \ (\%)$$

b) For steel grades H460 and higher, *CET* may be used instead of *Ceq* at the discretion of the manufacturer, and is to be calculated according to the following formula:

$$CET = C + \frac{(Mn + Mo)}{10} + \frac{(Cr + Cu)}{20} + \frac{Ni}{40} \ (\%)$$

Note:
The *CET* is included in the standard EN 1011-2:2001 used as one of the parameters for pre-heating temperature determination which is necessary for avoiding cold cracking.

c) For TM and QT steels with carbon content not more than 0.12%, the cold cracking susceptibility *P*cm for evaluating weldability may be used instead of carbon equivalent of *Ceq* or *CET* at manufacturer's discretion and is to be calculated using the following formula:

W16
(cont)

$$Pcm = C + \frac{Si}{30} + \frac{Mn}{20} + \frac{Cu}{20} + \frac{Ni}{60} + \frac{Cr}{20} + \frac{Mo}{15} + \frac{V}{10} + 5B\ (\%)$$

Table 1 Chemical Composition

Delivery condition[1)]	N/NR		TM		QT	
Steel grade / Chemical Composition[2)]	AH420 DH420 AH460 DH460	EH420 EH460	AH420 DH420 AH460 DH460 AH500 DH500 AH550 DH550 AH620 DH620 AH690 DH690 AH890	EH420 FH420 EH460 FH460 EH500 FH500 EH550 FH550 EH620 FH620 EH690 FH690 DH890 EH890	AH420 DH420 AH460 DH460 AH500 DH500 AH550 DH550 AH620 DH620 AH690 DH690 AH890 AH960	EH420 FH420 EH460 FH460 EH500 FH500 EH550 FH550 EH620 FH620 EH690 FH690 DH890 EH890 DH960 EH960
Carbon % max	0.20	0.18	0.16	0.14	0.18	
Manganese %	1.0~1.70		1.0~1.70		1.70	
Silicon % max	0.60		0.60		0.80	
Phosphorus % max[3)]	0.030	0.025	0.025	0.020	0.025	0.020
Sulphur % max[3)]	0.025	0.020	0.015	0.010	0.015	0.010
$Aluminium_{total}$ % min[4)]	0.02		0.02		0.018	
Niobium % max[5)]	0.05		0.05		0.06	
Vanadium % max[5)]	0.20		0.12		0.12	
Titanium % max[5)]	0.05		0.05		0.05	
Nickel % max[6)]	0.80		2.00[6)]		2.00[6)]	
Copper % max	0.55		0.55		0.50	
Chromium % max[5)]	0.30		0.50		1.50	
Molybdenum % max[5)]	0.10		0.50		0.70	
Nitrogen % max	0.025		0.025		0.015	
Oxygen ppm max[7)]	Not applicable		Not applicable	50	Not applicable	30

Note 1 See section 5.1 for definition of delivery conditions.

Note 2 The chemical composition is to be determined by ladle analysis and shall meet the approved manufacturing specification at the time of approval.

W16 (cont)

Note 3 For sections the P and S content can be 0.005% higher than the value specified in the table.

Note 4 The total aluminium to nitrogen ratio shall be a minimum of 2:1. When other nitrogen binding elements are used, the minimum Al value and Al/N ratio do not apply.

Note 5 Total Nb+V+Ti ≤ 0.26% and Mo+Cr ≤ 0.65%, not applicable for QT steels.

Note 6 Higher Ni content may be approved at the discretion of the Classification Society.

Note 7 The requirement on maximum Oxygen content is only applicable to DH890; EH890; DH960 and EH960.

Table 2 Maximum *Ceq*, *CET* and *P*cm values

Steel grade and delivery condition	Carbon Equivalent (%)							
	Ceq						*CET*	*P*cm
	Plates			Sections	Bars	Tubulars	all	all
	t ≤ 50 (mm)	50 < t ≤ 100 (mm)	100 < t ≤ 250 (mm)	t ≤ 50 (mm)	t ≤ 250 or d ≤ 250 (mm)	t ≤ 65 (mm)	all	all
H420N/NR	0.46	0.48	0.52	0.47	0.53	0.47	N.A	N.A
H420TM	0.43	0.45	0.47	0.44	N.A	N.A	N.A	N.A
H420QT	0.45	0.47	0.49	N.A	N.A	0.46	N.A	N.A
H460N/NR	0.50	0.52	0.54	0.51	0.55	0.51	0.25	N.A
H460TM	0.45	0.47	0.48	0.46	N.A	N.A	0.30	0.23
H460QT	0.47	0.48	0.50	N.A	N.A	0.48	0.32	0.24
H500TM	0.46	0.48	0.50	N.A	N.A	N.A	0.32	0.24
H500QT	0.48	0.50	0.54	N.A	N.A	0.50	0.34	0.25
H550TM	0.48	0.50	0.54	N.A	N.A	N.A	0.34	0.25
H550QT	0.56	0.60	0.64	N.A	N.A	0.56	0.36	0.28
H620TM	0.50	0.52	N.A	N.A	N.A	N.A	0.34	0.26
H620QT	0.56	0.60	0.64	N.A	N.A	0.58	0.38	0.30
H690TM	0.56	N.A	N.A	N.A	N.A	N.A	0.36	0.30
H690QT	0.64	0.66	0.70	N.A	N.A	0.68	0.40	0.33
H890TM	0.60	N.A	N.A	N.A	N.A	N.A	0.38	0.28
H890QT	0.68	0.75	N.A	N.A	N.A	N.A	0.40	N.A
H960QT	0.75	N.A	N.A	N.A	N.A	N.A	0.40	N.A

Note N.A = Not applicable

5. Delivery Condition - Rolling Process and Heat Treatment

5.1 Steel is to be delivered in accordance with the processes approved by the Classification Society. These processes include:

- Normalized (N)/Normalized rolled (NR)
- Thermo-mechanical controlled rolled (TM)/with Accelerated cooling (TM+AcC)/with direct quenching followed by tempering (TM+DQ), or

W16 (cont)

- Quenched and Tempered condition (QT)

The definition of these delivery conditions are defined in UR W11.

Note:
Direct quenching after hot-rolling followed by tempering is considered equivalent to conventional quenching and tempering.

5.2 Rolling reduction ratio

5.2.1 The rolling reduction ratio of slab, billet, bloom or ingot should not be less than 3:1 unless agreed at the time of approval.

5.3 Thickness limits for approval

5.3.1 The maximum thickness of slab, billet or bloom from the continuous casting process shall be at the manufacturer's discretion.

5.3.2 Maximum thickness of plates, sections, bars and tubulars over which a specific delivery condition is applicable are shown in Table 3.

Table 3 Maximum thickness limits

Delivery condition	Maximum thickness (mm)			
	Plates	Sections	Bars	Tubulars
N	250[2)]	50	250	65
NR	150	[1)]		
TM	150	50	Not applicable	Not applicable
QT	150[2)]	50	Not applicable	50

Note 1 The maximum thickness limits of sections, bars and tubulars produced by NR process route are less than those manufactured by N route, and shall be at the discretion of Classification Society.

Note 2 Approval for N steels with thickness larger than 250 mm and QT steels with thickness larger than 150 mm is subject to the special consideration of the Classification Society.

6. Mechanical Properties

Test specimens and test procedures for mechanical properties are in accordance with UR W2 and UR W11.

6.1 Tensile test

6.1.1 Test specimens are to be cut with their longitudinal axes transverse to the final direction of rolling, except in the case of sections, bars, tubulars and rolled flats with a finished width of 600 mm or less, where the tensile specimens may be taken in the longitudinal direction.

6.1.2 Full thickness flat tensile specimens are to be prepared. The specimens are to be prepared in such a manner as to maintain the rolling scale at least at one side. When the capacity of the test machine is exceeded by the use of a full thickness specimen, sub-sized flat tensile specimens representing either the full thickness or half of the product thickness retaining one rolled surface are to be used. Alternatively, machined round test specimens

W16 (cont)

may be used. The specimens are to be located at a position lying at a distance of t/4 from the surface and additionally at t/2 for thickness above 100 mm or as near as possible to these positions.

6.1.3 The results of the tests are to comply with the appropriate requirements of Table 4. In the case of product forms other than plates and wide flats where longitudinal tests are agreed, the elongation values are to be 2 percentage units above those transverse requirements as listed in Table 4.

Table 4 Tensile properties at ambient temperature for all steel grades

Mechanical properties / Steel grade and delivery condition		Minimum yield strength R_{eH} 1) (N/mm²)			Ultimate tensile strength R_m (N/mm²)		Minimum percentage elongation after fracture (%) $L_0=5.65\sqrt{S_0}$ 2)		Charpy V-notch impact test		
		Nominal thickness (mm)4)			Nominal thickness (mm)4)				Test temp (°C)	Minimum (Joules)	
		≥ 3 ≤ 50	> 50 ≤ 100	> 100 ≤ 250	≥ 3 ≤ 100	> 100 ≤ 250	T	L3)		T	L
H420N/NR H420TM H420QT	A D E F	420	390	365	520~680	470~650	19	21	0 -20 -40 -60	28	42
H460N/NR H460TM H460QT	A D E F	460	430	390	540~720	500~710	17	19	0 -20 -40 -60	31	46
H500TM H500QT	A D E F	500	480	440	590~770	540~720	17	19	0 -20 -40 -60	33	50
H550TM H550QT	A D E F	550	530	490	640~820	590~770	16	18	0 -20 -40 -60	37	55
H620TM H620QT	A D E F	620	580	560	700~890	650~830	15	17	0 -20 -40 -60	41	62
H690TM H690QT	A D E F	690	650	630	770~940	710~900	14	16	0 -20 -40 -60	46	69
H890TM H890QT	A D E	890	830	Not applicable	940~1100	Not applicable	11	13	0 -20 -40	46	69
H960QT	A D E	960	Not applicable	Not applicable	980~1150	Not applicable	10	12	0 -20 -40	46	69

Note 1 For tensile test either the upper yield stress (R_{eH}) or where R_{eH} cannot be determined, the 0,2 percent proof stress (Rp0.2) is to be determined and the material is considered to comply with the requirement if either value meets or exceeds the specified minimum value of yield strength.

Note 2 For full thickness flat test specimens with a width of 25 mm and a gauge length of 200 mm the elongation is to comply with the minimum values shown in Table 5.

W16 (cont)

Note 3 In the case that the tensile specimen is parallel to the final rolling direction, the test result shall comply with the requirement of elongation for longitudinal (L) direction.

Note 4 For plates and sections for applications, such as racks in offshore platforms etc, where the design requires that tensile properties are maintained through the thickness, a decrease in the minimum specified tensile properties is not permitted with an increase in the thickness.

Table 5 Elongation Minimum Values for a Width of 25 mm and a 200 mm Gauge Length[1)]

Strength level	Thickness (mm)						
	≤ 10	> 10 ≤ 15	> 15 ≤ 20	> 20 ≤ 25	> 25 ≤ 40	> 40 ≤ 50	> 50 ≤ 70
H420	11	13	14	15	16	17	18
H460	11	12	13	14	15	16	17
H500	10	11	12	13	14	15	16
H550	10	11	12	13	14	15	16
H620	9	11	12	12	13	14	15
H690	9[2)]	10[2)]	11[2)]	11	12	13	14

Note 1 The tabulated elongation minimum values are the requirements for testing specimen in transverse direction. H890 and 960 specimens and specimens which are not included in this table shall be proportional specimens with a gauge length of $L_0=5.65\sqrt{S_0}$.

Note 2 For H690 plates with thickness ≤ 20 mm, round specimen in accordance with Unified Requirement W2 may be used instead of the flat tensile specimen. The minimum elongation for testing specimen in transverse direction is 14%.

6.2 Impact test

6.2.1 The Charpy V-notch impact test specimens for plates and wide flats over 600 mm in width are to be taken with their axes transverse to the final rolling direction and the results should comply with the appropriate requirements for transverse direction of Table 4. For other product forms, the impact tests are to be in the longitudinal direction, the results of the tests are to comply with the appropriate requirements for longitudinal direction of Table 4.

6.2.2 Sub-surface test specimens will be taken in such a way that one side is not further away than 2 mm from a rolled surface, however, for material with a thickness in excess of 50 mm, impact tests shall be taken at the quarter thickness (t/4) location and mid-thickness (t/2).

6.2.3 Impact test for a nominal thickness less than 6 mm are normally not required.

6.3 Test frequency

6.3.1 Tensile test sample is to be randomly selected from each batch, as defined in IACS UR W11, that is to be less than or equal to 25 tonnes, and to be from the same cast, in the same delivery condition and of the same thickness.

6.3.2 Impact test

a) For steels plates in N/NR or TM condition test sample is to be taken from each piece.

W16 (cont)

b) For steels in QT condition test sample is to be taken from each individually heat treated part thereof.

c) For sections, bars and tubulars, test sample is to be taken from each batch of 25 tonnes or fraction thereof.

Note 1:
If the mass of the finished material is greater than 25 tonnes, one set of tests from each 25 tonnes and/or fraction thereof is required. (e.g. for consignment of 60 tonnes would require 3 plates to be tested).

Note 2:
For continuous heat treated product special consideration may be given to the number and location of test specimens required by the manufacturer to be agreed by the Classification Society.

6.4 Traceability

Traceability of test material, specimen sampling and test procedures including test equipment with respect to mechanical properties testing, is to be in accordance with UR W11.

6.5 Re-test procedures

Re-test procedures for tensile tests and Charpy impact tests are to be in accordance with UR W2.

6.6 Through thickness tensile test

6.6.1 For steels designated with improved through thickness properties, through thickness tensile tests are to be performed in accordance with Unified Requirement W14, “Steel plates and wide flats with specified minimum through thickness properties (“Z” quality)”.

6.6.2 Subject to the discretion of Classification Society, through thickness tensile strength may be required to be not less than 80% of the specified minimum tensile strength.

7. Tolerances

Unless otherwise agreed or specially required, the thickness tolerances in Unified Requirement W13, “Allowable under thickness tolerances of steel plates and wide flats” are applicable.

8. Surface Quality

8.1 All materials are to be free from cracks, injurious surface flaws, injurious laminations and similar defects.

8.2 The surface quality inspection method shall be in accordance with recognised national or international standards agreed between purchaser and manufacturer.

a) Welding repair procedures and the method for reporting repairs are to be approved by the individual Classification Societies.

b) Where repair by grinding is carried out then the remaining plate thickness below the ground area must be within the allowable under thickness tolerance.

W16 (cont)

8.3 Surface finish requirement shall be in accordance with the relevant requirements in Unified Requirement W11.

8.4 Surface inspection is the responsibility of the manufacturer. The acceptance by the Classification Society's Surveyor of material later found to be defective shall not absolve the manufacturer of this responsibility.

9. Internal Soundness

9.1 Verification of internal soundness is the responsibility of the manufacturer. The acceptance by the Classification Society's Surveyor shall not absolve the manufacturer of this responsibility.

9.2 Ultrasonic examination

9.2.1 If required by the Classification Society, ultrasonic examination should be carried out in accordance with UR W11 for the requirement of internal soundness, and is to be performed in accordance with an approved standard.

10. Stress relieving heat treatment and other heat treatments

10.1 Steels approved by the procedures given in Appendix A with respect to Heat Treatment are suitable for stress relieving heat treatment such as post-weld heat treatment and stress relieving heat treatment after cold forming for the purpose of reducing the risk of brittle fracture, increasing the fatigue lifetime and dimensional stability for machining.

Note:
Products can be susceptible to deterioration in mechanical strength and toughness if they are subjected to incorrect post-weld heat treatment procedures or other processes involving heating such as flame straightening, rerolling, etc. where the heating temperature and the holding time exceed the limits given by the manufacturer.

11. Facilities for Inspection

11.1 Testing is to be carried out under the witness of the Surveyor, or an authorised deputy, in order to verify whether the test results meet the specified requirements.

11.2 The manufacturer is to afford the Surveyor all necessary facilities and access to all relevant parts of the steel works to enable him to verify the approved process is adhered to, for the selection of test materials, and the witnessing of tests, as required by this UR. Also for verifying the accuracy of the testing, calibration of inspection equipment and traceability of materials.

12. Identification of Materials

12.1 The manufacturer is to adopt a system for the identification of ingots, slabs, billet or bloom and finished products, which will enable the material to be traced to its original cast. The Surveyor is to be given full facilities for so tracing the material when required.

13. Branding

13.1 Each finished piece is to be clearly marked by the manufacturer with the following particulars:

a) Classification Society's brand mark

W16 (cont)

b) Unified identification mark for the grade of steel (e.g. EH620)

c) Name or initials to identify the steelworks

d) Cast number/Heat number, plate number or equivalent identification mark

e) Delivery condition (N/NR, TM/TM+AcC/TM+DQ or Q&T)

The entire markings are to be encircled with paint or otherwise marked so as to be easily recognised. Steels which have been specially approved by the Classification Society and which differ from these requirements (see W16.1.6) are to have the letter “S” after the identification mark (e.g. EH620S)

14. Documentation of Inspection Tests

14.1 The Surveyor is to be supplied with two copies, of the test certificates or shipping statements for all accepted materials. In addition to the description, dimensions, etc., of the material, the following particulars are to be included:

a) Purchaser's order number

b) Identification of the cast and piece

c) Manufacturer’s identification

d) Identification of the grade of steel

e) Chemical analysis, *Ceq*, *CET* or *P*cm value

f) Delivery condition with heat treatment temperatures

g) Mechanical properties test results, including traceable test identification

h) Surface quality and inspection results

i) UT result, where applicable

14.2 Before the test certificates are signed by the Surveyor, the steelmaker is required to provide a written declaration stating that the material has been made by an approved process, and that it has been subjected to and has withstood satisfactorily the required tests in the presence of the Surveyor, or an authorised deputy. The following form of declaration will be accepted if stamped or printed on each test certificate with the name of the steelworks and signed by an authorised representative of the manufacturer:

“We hereby certify that the material has been made by an approved process and has been satisfactorily tested in accordance with the Rules of the Classification Society”.

W16 (cont)

Appendix A. Manufacturing Approval Scheme of High Strength Steels for Welded Structures

1. Scope of application

This appendix specifies the procedure for the approval of the manufacturing process of high strength steels for welded structures.

All materials are to be manufactured at works which have been approved by the Classification Society for the type, delivery condition, grade and thickness of steel which is being supplied. The suitability of each grade of steel for forming and welding is to be demonstrated during the initial approval tests at the steelworks.

The manufacturing approval scheme is valid for verifying the manufacturer's capability to provide satisfactory products stably under effective process and production controls in operation including programmed rolling, which is required in W16.2.2.

2. Approval application

2.1 Documents to be submitted

The manufacturer is to submit to the Society, a request for approval, a proposed approval test program (see A3.1) and general information relevant to:

a) Name and site address of the manufacturer, location of the workshops, general indications relevant to the background, dimension of the works, estimated total annual production of finished products, as deemed useful.

b) Organisation and quality

- organisational chart
- number of staff employed
- staff employed and organisation of the quality control department
- qualification of the personnel involved in activities related to the quality of the products
- certification of compliance of the quality system with IS0 9001 or 9002, if any
- approval certificates already granted by other Classification Societies, if any

c) Manufacturing facilities

- flow chart of the manufacturing process
- origin and storage of raw materials
- storage of finished products
- equipment for systematic control during manufacturing

W16 (cont)

d) Details of inspections and quality control facilities

- details of system used for identification of materials at the different stages of manufacturing
- equipment for mechanical tests, chemical analyses and metallography and relevant calibration procedures
- equipment for non-destructive examinations (NDE)
- list of quality control procedures

2.2 Manufacturing specification

a) Material to be approved, including type of products (plates, sections, bars and tubular), delivery condition, grades of steel, range of thickness and aim material properties as follows:

- range of chemical composition, aim analyses and associated control limits, including grain refining, nitrogen binding, micro alloying and residual elements, for the various grades of steel; if the range of chemical composition depends on thickness and delivery condition, the different ranges are to be specified, as appropriate.
- in addition, where zirconium, calcium and rare earth metals have been used during steelmaking for grain refinement and, or inclusion modification, the contents of these elements shall be specified in the manufacturing specification.
- aim carbon equivalent *Ceq* according to IIW formula or *CET* formula and/or aim *P*cm content and associated control limits.
- production statistics of the chemical composition and mechanical properties (R_{eH}, R_m, A% and CVN). The statistics are intended to demonstrate the capability to manufacture the steel products.

b) Steelmaking (if applicable)

- steel making process and capacity of furnace/s or converter/s
- raw material used
- deoxidation, grain refining, nitrogen binding and alloying practice
- desulphurisation, dehydrogenation, sulphide treatment, ladle refining and vacuum degassing installations, if any
- casting methods: ingot or continuous casting. In the case of continuous casting, information relevant to type of casting machine, teeming practice, methods to prevent re-oxidation, inclusions and segregation control, presence of electromagnetic stirring, soft reduction, etc., is to be provided as appropriate
- casting/solidification cooling rate control
- ingot or slab size and weight
- ingot or slab treatment: scarfing and discarding procedures

W16 (cont)

c) Reheating and rolling

- type of furnace and treatment parameters
- rolling: reduction ratio of ingot/slab/bloom/billet to finished product, rolling and finishing temperatures for each grade/thickness combination
- descaling treatment during rolling
- capacity of the rolling stands

d) Heat treatment

- type of furnaces, heat treatment parameters for products to be approved
- accuracy and calibration of temperature control devices
- the methods used to determine austenitizing temperature, re-crystallization temperature and Ar3 temperature
- description of quenching and tempering process, if applicable

e) Programmed rolling

For products delivered in the Normalised rolling (NR) or thermo-mechanical rolling (TM) condition, the following additional information on the programmed rolling schedules is to be given:

- description of the rolling process
- the methods used to determine austenitizing temperature, re-crystallization temperature and Ar3 temperature
- control standards for typical rolling parameters used for the different thickness and grades of steel (temperature and thickness at the beginning and at the end of the passes, interval between passes, reduction ratio, temperature range and cooling speed of accelerated cooling, if any) and relevant method of control
- calibration of the control equipment

f) Recommendations for fabrication and welding in particular for products delivered in the NR or TM condition:

- cold and hot working recommendations if needed in addition to the normal practice used in the shipyards and workshops
- minimum and maximum heat input and recommended pre-heat/interpass temperature

g) Where any part of the manufacturing process is assigned to other companies or other manufacturing plants, additional information required by the Society is to be included.

h) Approval already granted by other Classification Societies and documentation of approval tests performed.

W16 (cont)

2.3 Documents to be submitted for changing the approval conditions

The manufacturer has to submit to the Society the documents required in 2.1 together with the request of changing the approval conditions, in the case of the following a) through e) as applicable:

a) Change of the manufacturing process (steel making, casting, rolling and heat treatment).

b) Change of the maximum thickness (dimension).

c) Change of the chemical composition, added element, etc.

d) Subcontracting the rolling, heat treatment, etc.

e) Use of the ingots, slabs, blooms and billets manufactured by companies other than the ones verified in the approval tests.

However, where the documents are duplicated by the ones at the previous approval for the same type of product, part or all of the documents may be omitted except the approval test program (see 3.1).

3. Approval tests

3.1 Extent of the approval tests

The extent of the test program is specified in 3.6 and 3.7; it may be modified on the basis of the preliminary information submitted by the manufacturer.

In particular a reduction of the indicated number of casts, steel plate thicknesses and grades to be tested or complete suppression of the approval tests may be accepted by the Society taking into account:

a) Approval already granted by other Classification Societies and documentation of approval tests performed.

b) Grades of steel to be approved and where available the long term statistical results of chemical and mechanical properties.

An increase of the number of casts and thicknesses to be tested may be required in the case of newly developed types of steel or manufacturing processes.

In case of multi-source slabs or changing of slab manufacturer, the rolled steel manufacturer is required to obtain the approval of the manufacturing process of rolled steels using the slabs from each slab manufacturer and to conduct approval tests in accordance with 3.6 and 3.7. A reduction or complete suppression of the approval tests may be considered by the Society taking into account previous approval as follows:

- the rolled steel manufacturer has already been approved for the rolling process and heat treatment using approved other semi finished products characterized by the same thickness range, steel grade, grain refining and micro-alloying elements, steel making(deoxidation) and casting process.

- the semi finished products have been approved for the complete manufacturing process with the same conditions (steelmaking, casting, rolling and heat treatment) for the same steel types.

W16 (cont)

3.2 Approval test program

Where the number of tests differs from those shown in 3.6 and 3.7, the program is to be confirmed by the Society before the tests are carried out.

3.3 Approval survey

The approval tests are to be witnessed by the Surveyor at the manufacturer's plant and the execution of the plant inspection in operation may be required by the Surveyor during the visit for the approval.

If the testing facilities are not available at the works, the tests are to be carried out at accredited laboratories.

3.4 Selection of the test product

For each grade of steel and for each manufacturing process (e.g. steel making, casting, rolling and condition of supply), one test product with the maximum thickness (dimension) to be approved is in general to be selected for each kind of product.

In addition, for initial approval, the Society will require selection of one test product of representative thickness.

The selection of the casts for the test product is to be based on the typical chemical composition, with particular regard to the aimed *Ceq*, *CET* or *P*cm values and grain refining micro-alloying additions.

3.5 Position of the test samples and specimens

The test samples are to be taken, unless otherwise agreed, from the product (plate, flat, section, bar and tubular) corresponding to the top and bottom of the ingot as indicated in Table A1, or, in the case of continuous casting, a random sample.

The position of the samples to be taken in the length of the rolled product, "piece" defined in W11, (top and bottom of the piece) and the direction of the test specimens with respect to the final rolling direction of the material are indicated in Table A1.

The position of the samples in the width of the product is to be in accordance with W11.

The position of the tensile and Charpy impact test samples with respect to the plate thickness is to be in accordance with Appendix 2 section 3.6.2 of W11.

3.6 Tests on base material

3.6.1 Type of tests

The tests to be carried out are indicated in the following Table A1.

W16 (cont)

Table A1 Tests on base material

Type of Test		Position and direction of test specimens	Remarks			
1	Chemical analysis (ladle and product[1)])	Top	a) Contents of C, Mn, Si, P, S, Ni, Cr, Mo, Al, N, Nb, V, Ti, B, Zr, Cu, As, Sn, Bi, Pb, Ca, Sb, O, H are to be reported. b) Carbon equivalent calculation, and/or c) *P*cm calculation, as applicable.			
2	Segregation examination	Top	Sulphur prints[2)] are to be taken from plate edges which are perpendicular to the axis of the ingot or slab. These sulphur prints are to be approximately 600 mm long taken from the centre of the edge selected, i.e. on the ingot centreline, and are to include the full plate thickness.			
3	Micrographic examination[3)]	Top	a) Grain size determination. Ferrite and/or prior austenite grain size should be determined. b) All photomicrographs are to be taken at x 100 and 500 magnification. c) Non-metallic inclusion contents/Cleanliness The level of non-metallic inclusions and impurities in term of amount, size, shape and distribution shall be controlled by the manufacturer. The standards of the micrographic examination methods ISO 4967 or equivalent standards are applicable. Alternative methods for demonstrating the non-metallic inclusions and impurities may be used by the manufacturer.			
4	Tensile test	Top and bottom - longitudinal and transverse direction	Yield strength (R_{eH}), Tensile strength (R_m), Elongation (A5), Reduction in Area (RA) and Y/T ratio are to be reported.			
5a	Charpy Impact tests on unstrained specimens for grades[4)]	Top and bottom	Testing temperature (°C)			
	AH	Longitudinal and transverse direction	+20	0	-20	
	DH		0	-20	-40	
	EH		0	-20	-40	-60
	FH		-20	-40	-60	-80

W16 (cont)

Type of Test		Position and direction of test specimens	Remarks			
5b	Charpy Impact tests on strain aged specimens for grades[4)5)]	Top	Deformation of 5% + 1 hour at 250°C			
	AH	Either longitudinal or transverse	+20	0	-20	
	DH		0	-20	-40	
	EH		0	-20	-40	-60
	FH		-20	-40	-60	-80
6	Drop weight test	Top	The test is to be performed only on plates in accordance with ASTM E208. The NDTT is to be determined and photographs of the tested specimens are to be taken and enclosed with the test report.			
7	Through thickness tensile tests	Top and bottom	Optional for grades with improved through thickness properties, testing in accordance with UR W14.			
8	Weldability test[6)]					
a)	Butt Weld Assembly as-welded	Top	Cross weld tensile, Charpy impact test on WM, FL, FL+2, FL+5, FL+20 Macro examination and hardness survey, CTOD at -10°C on Grain-coarsened HAZ.			
b)	Butt Weld Assembly (PWHT), if applicable	Top	Cross weld tensile, Charpy impact test on WM, FL, FL+2, FL+5, FL+20 Macro examination and hardness survey, CTOD at -10°C on Grain-coarsened HAZ.			
c)	Y-shape weld crack test (Hydrogen crack test)	Top				

Note 1 The product analyses should be taken from the tensile specimen. The deviation of the product analysis from the ladle analysis shall be permissible in accordance with the limits given in the manufacturing specification.

Note 2 Other tests than Sulphur prints for segregation examination may be applied and subject to acceptance by the Classification Society.

Note 3 The micrographs are to be representative of the full thickness. For thick products in general at least three examinations are to be made at surface, 1/4t and 1/2t of the product.

Note 4 In addition to the determination of the absorbed energy value, also the lateral expansion and the percentage crystallinity are to be reported.

Note 5 Strain ageing test is to be carried out on the thickest plate.

Note 6 Weldability test is to be carried out on the thickest plate.

W16 (cont)

3.6.2 Test specimens and testing procedure

The test specimens and testing procedures are to be in accordance with W2, where applicable.

3.6.3 Other tests

Additional tests such as CTOD test on parent plate, large scale brittle fracture tests (Double Tension test, ESSO test, Deep Notch test, etc.) or other tests may be required in the case of newly developed type of steel, outside the scope of W16, or when deemed necessary by the Society.

3.7 Weldability tests - Butt weld test

3.7.1 For H420 to H500 grade steels: Weldability tests are to be carried out on samples of the thickest plate. Testing on higher grades can cover the lower strength and toughness grades.

a) 1x butt weld test assembly welded with a heat input 15±2 kJ/cm is to be tested as-welded.

b) 1x butt weld test assembly welded with a heat input 50±5 kJ/cm for N/NR and TM and 35±3.5 kJ/cm for QT steels is to be tested as-welded.

c) 1x butt weld test assembly welded with the same heat input as given in b) is to be post-weld heat treated (PWHT) prior to testing.

Option: Steels intended to be designated as steels for high heat input welding are to be tested with 1x butt weld test assembly in the as-welded condition and 1x test assembly in the PWHT condition, both welded with the maximum heat input being approved.

3.7.2 For H550 to H960 grade steels:

In general, the thickest plate with the highest toughness grade for each strength grade is to be tested. Provided the chemical composition of the higher grade is representative to the lower grade, testing requirements on the lower grades may be reduced at the discretion of the Classification Society.

a) 1x butt weld test assembly welded with a heat input 10±2 kJ/cm is to be tested as-welded.

b) 1x butt weld test assembly welded with a maximum heat input as proposed by the manufacturer is to be tested as-welded. The approved maximum heat input shall be stated on the manufacturer approval certificate.

Option: If the manufacturer requests to include the approval for Post Weld Heat Treated (PWHT) condition, 1x additional butt weld test assembly welded with a maximum heat input proposed by the manufacturer for the approval same as test assembly b) is to be post-weld heat treated (PWHT) prior to testing.

3.7.3 Butt weld test assembly

The butt weld test assemblies of N/NR plates are to be prepared with the weld seam transverse to the final plate rolling direction.

The butt weld test assemblies of TM/TM+AcC/TM+DQ and QT plates are to be prepared with the weld seam parallel to the final plate rolling direction. The butt weld test assemblies of long

W16 (cont)

products, sections and seamless tubular in any delivery condition are to be prepared with the weld seam transverse to the rolling direction.

3.7.4 Bevel preparation

The bevel preparation should be preferably 1/2V or K related to thickness.

The welding procedure should be as far as possible in accordance with the normal welding practice used for the type of steel in question.

The welding procedure and welding record are to be submitted to the Classification Society for review.

3.7.5 Post-weld heat treatment procedure

a) Steels delivered in N/NR or TM/TM+AcC/TM+DQ condition shall be heat treated for a minimum time of 1 hour per 25 mm thickness (but not less than 30 minutes and needs not be more than 150 minutes) at a maximum holding temperature of 580°C, unless otherwise approved at the time of approval.

b) Steels delivered in QT condition shall be heat treated for a minimum time of 1 hour per 25 mm thickness (but not less than 30 minutes and needs not be more than 150 minutes) at a maximum holding temperature of 550°C with the maximum holding temperature of at least 30°C below the previous tempering temperature, unless otherwise approved at the time of approval.

c) Heating and cooling above 300°C shall be carried out in a controlled manner in order to heat/cool the material uniformly. The cooling rate from the max. holding temperature to 300°C shall not be slower than 55°C/hr.

3.7.6 Type of tests

From the test assemblies the following test specimens are to be taken:

a) 1 cross weld tensile test - 1 full thickness test sample or sub-sized samples cover the full thickness cross section.

b) 1 set of 3 Charpy V-notch impact specimens transverse to the weld seam and 1-2 mm below the surface with the notch located at the fusion line and at a distance 2, 5 and 20 mm from the straight fusion line. An additional set of 3 Charpy test specimens at root is required for each aforementioned position for plate thickness t ≥ 50 mm. The fusion boundary is to be identified by etching the specimens with a suitable reagent. The test temperature is to be the one prescribed for the testing of the steel grade.

c) Hardness tests HV10 across the weldment. The indentations are to be made along a 1-2 mm transverse line beneath the plate surface on both the face side and the root side of the weld as follows:

- fusion line
- HAZ: at each 0.7 mm from fusion line into unaffected base material (6 to 7 minimum measurements for each HAZ)

W16 (cont)

The maximum hardness value should not be higher than 350HV for grade steels H420 to H460; not be higher than 420HV for H500 to H690; and not be higher than 450HV for H890 and H960.

A sketch of the weld joint depicting groove dimensions, number of passes, hardness indentations should be attached to the test report together with photomacrographs of the weld cross section.

d) CTOD test

CTOD test specimens are to be taken from butt weld test assembly specified in 3.7.1 b) or 3.7.2 b) in Appendix A of this UR. CTOD test is to be carried out in accordance with EN ISO 15653 or equivalent.

- the specimen geometry (B = W) is permitted for plate thickness up to 50 mm. For plate thicker than 50 mm, subsidiary specimen geometry (50x50 mm) is permitted, which is to be taken 50 mm in depth through thickness from the subsurface and 50 mm in width. See Figure A1 a) and b) for more details
- the specimens shall be notched in through thickness direction
- grain-coarsened HAZ (GCHAZ) shall be targeted for the sampling position of the crack tip
- the test specimens shall be in as-welded and post-weld heat treated, if applicable
- three tests shall be performed at -10°C on each butt weld test assembly

For grades H690 and above, dehydrogenation of as-welded test pieces may be carried out by a low temperature heat treatment, prior to CTOD testing. Heat treatment conditions of 200°C for 4 h are recommended, and the exact parameters shall be notified with the CTOD test results.

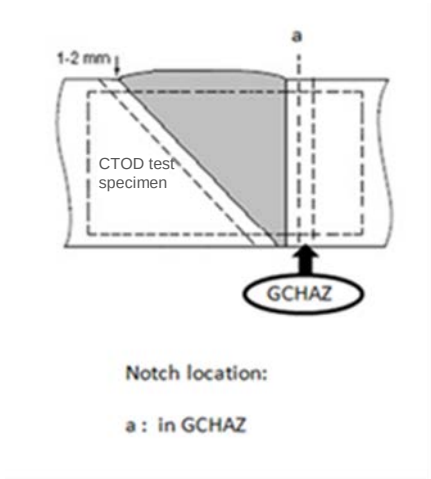

Figure A1 a) - For plate thickness t ≤ 50 mm, CTOD test specimen is to be sampled in full thickness

W16
(cont)

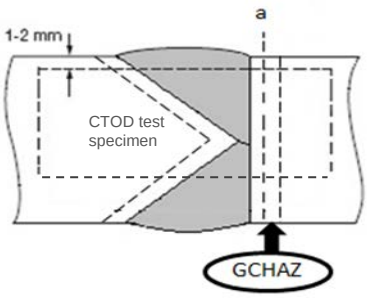

Notch location:

a : in GCHAZ

Figure A1 b) - For plate thickness t > 50 mm, subsidiary test specimen with a thickness of maximum 50 mm in subsurface area is to be sampled

3.7.7 Crack susceptibility weld test (Hydrogen crack test)

Testing in accordance with national and international recognised standards such as GB/T4675.1 and JIS Z 3158 for Y-groove weld crack test. Minimum preheat temperature is to be determined and the relationship of minimum preheat temperature with thickness is to be derived.

3.7.8 Other tests

Additional tests may be required in the case of newly developed types of steel, outside the scope of W16, or when deemed necessary by the Society.

4. Results

All the results are to comply with the requirements of the scheme of initial approval.

The subject manufacturer shall submit all the test results together with the manufacturing specification containing all the information required under Appendix A, Section 2, and manufacturing records relevant to steel making, casting, rolling and heat treatment, applicable to the product submitted to the tests.

5. Certification

5.1 Approval

Upon satisfactory completion of the survey, approval is granted by the Society.

5.2 List of approved manufacturers

The approved manufacturers are entered in a list containing the types of steel and the main conditions of approval.

W16
(cont)

6. Renewal of approval

The validity of the approval is to be a maximum of five years.

Renewal can be granted by a periodic inspection and evaluation of the result of the inspection to the surveyor's satisfaction during the period.*

Where for operational reasons, the renewal audit falls outside the period of approval, the manufacturer will still be considered as approved if agreement to this audit date is made within the original period of approval, in this instance if successful, the extension of approval will be back dated to the original renewal date.

Manufacturers who have not produced the approved grades and products during the period between renewals may be required to either carry out approval tests or, on the basis of the statistical data of results of production of similar grades of products, at the discretion of the Society, be reapproved.

7. Removal of the approval

During the period of validity the approval may be reconsidered in the following cases:

a) In service failures, traceable to product quality.

b) Non conformity of the product revealed during fabrication and construction.

c) Discovered failure of the Manufacturer's quality system.

d) Changes brought by the Manufacturer, without preliminary agreement of the Society, to the extent of invalidating the approval.

e) Evidence of major non conformities during testing of the products.

* The provision for renewal of approval is also to be applied to all grades and products which were approved by the Society prior to an implementation of revision 3 of this UR W16 regardless of the validity of certificate in existing approvals. Such renewal is to be completed within five years after the revision 3 becomes effective.

End of Document

W17
(1986)
(Rev.1 1993)
(Rev.2 May 2004)
(Rev.3 June 2005)
(Rev.4 Jan 2016)
(Rev.5 Mar 2018)
(Rev.6 Sep 2021)

Approval of consumables for welding normal and higher strength hull structural steels

1. General

1.1 Scope

1.1.1 These requirements give the conditions of approval and inspection of welding consumables used for hull structural steel according to UR W11as follows:

- normal strength steels Grades A, B, D and E,
- higher strength steels Grades A32, D32, E32, A36, D36 and E36,
- higher strength steels with minimum yield strength 390 N/mm^2: Grades A40, D40 and E40,
- higher strength steels for low temperature application: Grades F32, F36 and F40.

Welding consumables for high strength steels for welded structures are to comply with the requirements of UR W23.

These requirements are not applicable for welding procedure qualification tests at the shipyard.

1.1.2 Categories of products

The concerned welding consumables are divided into several categories as follows:

- covered electrodes for manual welding and gravity welding,
- wire/flux combinations for two run or multi-run submerged arc welding,
- solid wire/gas combinations for arc welding,
- flux cored wires with or without gas for arc welding,
- consumables for use in electroslag and electrogas vertical welding

---

Note:

1. The requirements of UR W17 Rev.4 are to be uniformly implemented by IACS Members from 1 July 2017.

2. Rev.5 of this UR is to be uniformly implemented by IACS Societies when an application for approval is dated on after 1 July 2019.

3. Rev.6 of this UR is to be uniformly implemented by IACS Societies when an application for approval is dated on after 1 January 2023.

W17 (cont)

1.2 Grading

1.2.1 Basic groups and grades

Filler metals are divided into three groups:

- normal strength filler metals for welding normal strength hull structural steels,
- higher strength filler metals for welding normal and higher strength hull structural steels with minimum yield strength up to 355 N/mm^2,
- higher strength filler metals for welding normal and higher strength hull structural steels with minimum yield strength up to 390 N/mm^2.

Each of the three groups is based on corresponding tensile strength requirements.

Each filler metal group is further divided into several grades:

- Grades 1, 2 and 3 for ordinary-strength filler metals,
- Grades 1Y, 2Y, 3Y and 4Y for higher strength filler metals for steels up to 355 N/mm^2 yield strength,
- Grades 2Y40, 3Y40, 4Y40 and 5Y40 for higher strength filler metals for steels up to 390 N/mm^2 yield strength.

The Grade assignment is given in respect of Charpy V-notch impact test requirements.

For each strength basic group, welding consumables, which have satisfied the requirements for a higher toughness grade are considered as complying with the requirements for a lower toughness grade.

1.2.2 Correlation of welding consumables to hull structural steel grades.

The correlation between the hull steel grades and the welding consumables grades that must be used for the hull steel welding, is stated in the following Table 1:

W17 (cont)

Table 1 Correlation of welding consumables to hull structural steels

Grades of welding	Hull structural steel grades											
consumables (see notes)	A	B	D	E	A32/36	D32/36	E32/36	F32/36	A40	D40	E40	F40
1, 1S, 1T, 1M, 1TM, IV	X											
1YS, 1YT, 1YM, 1YTM, 1YV	X				2)							
2, 2S, 2T, 2M, 2TM, 2V	X	X	X									
2Y, 2YS, 2YT, 2YM, 2YTM, 2YV	X	X	X		X	X						
2Y40, 2Y40S, 2Y40T, 2Y40M, 2Y40TM, 2Y40V	1)	1)	1)		X	X			X	X		
3, 3S, 3T, 3M, 3TM, 3V	X	X	X	X								
3Y, 3YS, 3YT, 3YM, 3YTM, 3YV	X	X	X	X	X	X	X					
3Y40, 3Y40S, 3Y40T, 3Y40M, 3Y40TM, 3Y40V	1)	1)	1)	1)	X	X	X		X	X	X	
4Y, 4YS, 4YT, 4YM, 4YTM, 4YV	X	X	X	X	X	X	X	X				
4Y40, 4Y40S, 4Y40T, 4Y40M, 4Y40TM, 4Y40V	1)	1)	1)	1)	X	X	X	X	X	X	X	X
5Y40, 5Y40S, 5Y40T, 5Y40M, 5Y40TM, 5Y40V	1)	1)	1)	1)	X	X	X	X	X	X	X	X
1) see note d) 2) see note e)												

W17 (cont)

NOTES:

(a) When joining normal to higher strength structural steel, consumables of the lowest acceptable grade for either material being joined may be used.

(b) When joining steels of the same strength level but of different toughness grade, consumables of the lowest acceptable grade for either material being joined may be used.

(c) It is recommended that controlled low hydrogen type consumables are to be used when joining higher strength structural steel to the same or lower strength level, except that other consumables may be used at the discretion of the Society when the carbon equivalent is below or equal to 0.41%.When other than controlled low hydrogen type electrodes are used appropriate procedure tests for hydrogen cracking may be conducted at the discretion of the Society.

(d) The welding consumables approved for steel Grades A40, D40, E40 and/or F40 may also be used for welding of the corresponding grades of normal strength steels subject to the special agreement with the Classification Society.

(e) When joining higher strength steels using Grade 1Y welding consumables, the material thicknesses should not exceed 25 mm.

1.2.3 Hydrogen marks

Welding consumables of Grades 2 and 3 and Grades 2Y, 3Y and 4Y and of Grades 2Y40, 3Y40, 4Y40 and 5Y40, for which the hydrogen content has been controlled in accordance with paragraph 4.5.3 are identified by the mark H15, H10 or H5.

1.3 Manufacture

1.3.1 The manufacturer's plant, methods of production and quality control of welding consumables are to be such as to ensure reasonable uniformity in manufacture.

2. Approval procedure

2.1 Plant inspection

2.1.1 The Surveyor is to be satisfied that the manufacturer's plant, methods of production and quality control of welding consumables are to be such as to ensure a reasonable uniformity in manufacture, as mentioned in 1.3.1 above.

2.2 Test assemblies

2.2.1 Preparation

The test assemblies are to be prepared under the supervision of the Surveyor, and all tests are to be carried out in his presence.

When a welded joint is performed, the edges of the plates are to be bevelled either by mechanical machining or by oxygen cutting; in the later case, a de-scaling of the bevelled edges is necessary.

W17
(cont)

2.2.2 Welding conditions

The welding conditions used such as amperage, voltage, travel speed, etc are to be within the range recommended by the manufacturer for normal good welding practice. Where a filler material is stated to be suitable for both alternating current (AC) and direct current (DC), AC is to be used for the preparation of the test assemblies.

2.3 Firms with several factories - sister firms

When a filler product is manufactured in several factories of the same company, the complete series of approval tests should be carried out in one of the works only. In the other factories, a reduced test programme at least equivalent to annual tests is permitted if the manufacturer can certify that the materials used and the fabrication process are identical with those used in the main works.
This requirement is applicable to all manufacturers of filler products under license (sister firms). However, should there be any doubt, complete test-series may be required.

NOTE:

Wire flux combination for submerged arc welding. If a unique powder flux is combined with different wires coming from several factories belonging to the same firm, it may be admitted to perform only one test-series if the different wires are conformable to the same technical specification, after approval of the relevant Classification Society.

2.4 Annual inspection and tests

The production techniques and associated quality control procedures at all establishments approved for the manufacture of welding consumables are to be subjected to an annual re-appraisal. On these occasions, samples of the approved consumable are to be selected by the Surveyor and subjected to the tests detailed in subsequent sections of these Requirements. These are to be completed and reported within the one year period beginning at the initial approval date, and repeated annually so as to provide at least an average of one annual test per year. Equivalent alternative arrangements may be accepted subject to special agreement with the Classification Society.

2.5 Alterations to approved consumables

Any alteration proposed by the manufacturer to the approved consumable which may result in a change in the chemical composition and the mechanical properties of the deposited metal, must be immediately notified to the Society. Additional tests may be necessary.

2.6 Upgrading and uprating

Upgrading and uprating of welding consumables will be considered only at manufacturer's request, preferably at the time of annual testing. Generally, for this purpose, tests from butt weld assemblies will be required in addition to the normal annual approval tests.

2.7 Additional tests

The classification societies may request, in a particular case, additional tests or requirements as may be considered necessary.

W17
(cont)

3. Mechanical testing procedure

3.1 Test specimens

3.1.1 Specimens dimensions

Deposited metal and butt weld tensile, butt weld bend and Charpy V-notch impact test specimens are to be machined to the dimensions given in UR W2.

3.1.2 Specimens location and preparation

.1 Deposited metal tensile
The longitudinal axis must coincide with the centre of the weld and:

(i) the mid thickness of the weld in the deposited metal test assemblies;
(ii) the mid thickness of the 2nd run in the two-run welded test assemblies.

The specimens may be heated to a temperature not exceeding 250°C for a period not exceeding 16 hours for hydrogen removal prior to testing.

.2. Butt weld tensile
The upper and lower surfaces of the weld are to be filed, ground or machined flush with the surface of the plate.

.3 Butt weld bend
The upper and lower surfaces of the weld are to be filed, ground or machined flush with the Surface of the plate and the sharp corners of the specimens rounded to a radius not exceeding 2 mm.

.4 Charpy V-notch impact
The test specimens shall be cut with their longitudinal axes transverse to the weld length and:

(i) at mid thickness of the weld in the deposit metal and butt weld test assemblies with multi-run technique;
(ii) on the 2nd run side, 2 mm maximum below the surface in the two-run welded test assemblies;
(iii) 2 mm maximum below one surface in the electroslag or electrogas welded test assemblies.

The notch shall be cut in the face of the test piece perpendicular to the surface of the plate and shall be positioned in the centre of the weld and, for electroslag and electrogas welded test assemblies, also at 2 mm from the fusion line in the deposited metal.

3.2 Testing procedures

3.2.1 Tensile

Tensile tests are to be carried out on an approved tensile testing machine.
On deposited metal test specimens, the values of yield stress, tensile strength and elongation are to be recorded. On butt weld specimens, the values of tensile strength are to be recorded together with the position of fracture.

3.2.2 Bend

The test specimens are to be capable of withstanding, without fracture or crack, being bent through an angle of 120° over a former having a diameter three times the thickness of the specimen. However, superficial cracks of less than 3 mm long on the outer surface should not be taken into consideration.

For each set of bend tests one specimen is to be tested with the face of the weld in tension and the other with the root of the weld in tension except in the electroslag or electrogas welded test assemblies, where side bend tests are carried out in lieu of face and root bend tests.

3.2.3 Charpy V-notch impact

Impact tests are to be carried out on a Charpy impact machine of an approved type.

A set of three test specimens is to be prepared and tested. The average absorbed energy value is to comply with the requirements of subsequent sections. One individual value may be less than the required average value provided that it is not less than 70% of this value.

The test temperature for Grades 2, 2Y, 2Y40, 3, 3Y, 3Y40, 4Y, 4Y40 and 5Y40 test pieces is to be controlled to within ±2°C of the prescribed temperature.

3.3 Re-test procedures

3.3.1 Tensile and bend

Where the result of a tensile or bend test does not comply with the requirements, duplicate test specimens of the same type are to be prepared and satisfactorily tested. Where insufficient original welded assembly is available, a new assembly is to be prepared using welding consumables from the same batch. If the new assembly is made with the same procedure (particularly the number of runs) as the original assembly, only the duplicate re-test specimens needs to be prepared and tested. Otherwise, all test specimens should be prepared as for re-testing.

3.3.2 Charpy V-notch impact

Re-test requirements for Charpy impact tests are to be in accordance with UR W2. Further re-tests may be made at the Surveyor's discretion, but these must be made on a new welded assembly and must include all tests required for the original assembly, even those which were previously satisfactory.

4. Covered electrodes for manual arc welding

4.1 General

4.1.1 Grades

Depending on the results of the Charpy V-notch impact tests, electrodes are divided into the following grades

- for normal strength steel: Grades 1, 2 and 3
- for higher strength steel with minimum yield strength up to 355 N/mm^2: Grades 2Y and 3Y and 4Y (Grade 1Y not applicable for manual welding).

W17 (cont)

- for higher strength steels with minimum yield strength up to 390 N/mm^2: Grades 2Y40, 3Y40, 4Y40 and 5Y40.

4.1.2 Hydrogen marks

If the electrodes are in compliance with the requirements of the hydrogen test given in 4.5 hereafter, a suffix H15, H10 or H5 will be added to the Grade mark.

4.2 Deposited metal tests

4.2.1 Preparation of deposited metal test assemblies

Two deposited metal test assemblies are to be prepared in the downhand position as shown in Fig 4.1, one with 4 mm diameter electrodes and the other with the largest size manufactured. If an electrode is available in one diameter only, one test assembly is sufficient. Any grade of ship structural steel may be used for the preparation of these test assemblies.

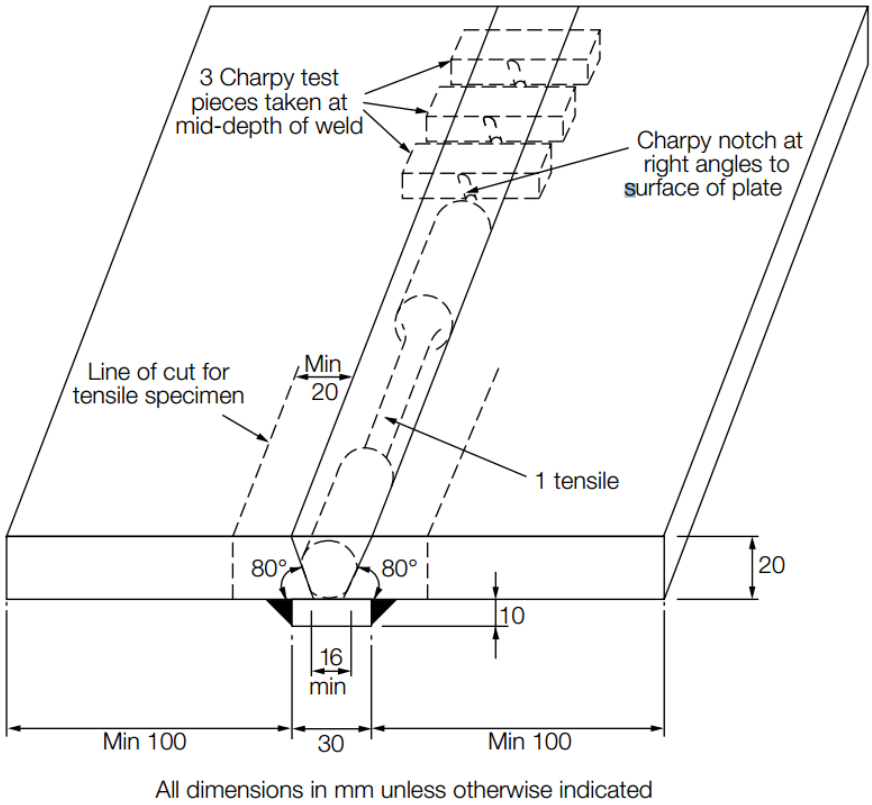

Figure 4.1 Deposited metal test assembly

The weld metal is to be deposited in single or multi-run layers according to normal practice, and the direction of deposition of each layer is to alternate from each end of the plate, each run of weld metal being not less than 2 mm and not more than 4 mm thick. Between each run, the assembly is to be left in still air until it has cooled to less than 250°C but not below 100°C, the temperature being taken in the centre of the weld, on the surface of the seam. After welding, the test assemblies are not to be subjected to any heat treatment.

W17 (cont)

4.2.2 Chemical analysis

At the discretion of each individual Society, the chemical analysis of the deposited weld metal in each test assembly is to be supplied by the manufacturer and is to include the content of all significant alloying element.

4.2.3 Execution of tests

One tensile and three impact test specimens are to be taken from each test assembly as shown in Figure 4.1. Care is to be taken that the axis of the tensile test specimen coincides with the centre of the weld and the mid-thickness of the plates. Tests are to be performed according to Section 3 of these requirements.

4.2.4 Results of tests and requirements

The results of all tests are to comply with the requirements of Table 4a as appropriate.

Table 4a Requirements for deposited metal tests (covered manual electrodes)

Grade	Yield stress N/mm^2 minimum	Tensile strength N/mm^2	Elongation on 50 mm gauge length (L_0=5 d) % minimum	Charpy V-notch impact tests	
				Test Temperature °C	Average Energy J minimum
1	305	400-560	22	20	47
2				0	47
3				-20	47
2Y	375	490-660	22	0	47
3Y				-20	47
4Y				-40	47
2Y40	400	510-690	22	0	47
3Y40				-20	47
4Y40				-40	47
5Y40				-60	47

4.3 Butt weld tests

4.3.1 Preparation of butt weld test assemblies

Butt weld assemblies as shown in Fig 4.2 are to be prepared for each welding position (downhand, horizontal-vertical, vertical-upward, vertical-downward and overhead) for which the electrode is recommended by the manufacturer, except that electrodes satisfying the requirements for downhand and vertical-upward positions will be considered as also complying with the requirements for the horizontal-vertical position subject to the agreement of the Classification Society.

Where the electrode is to be approved only in the downhand position, an additional test assembly is to be prepared in that position.

For the preparation of the test assemblies one of the steel grades as listed below for the individual electrode grades shall be used:

- Grade 1 electrodes : A
- Grade 2 electrodes : A, B, D

W17 (cont)

-	Grade 3 electrodes	:	A, B, D, E
-	Grade 2Y electrodes	:	A32, A36, D32, D36
-	Grade 3Y electrodes	:	A32, A36, D32, D36, E32, E36
-	Grade 4Y electrodes	:	A32, A36, D32, D36, E32, E36, F32, F36
-	Grade 2Y40 electrodes	:	A40, D40
-	Grade 3Y40 electrodes	:	A40, D40, E40
-	Grade 4Y40 electrodes	:	A40, D40, E40, F40
-	Grade 5Y40 electrodes	:	A40, D40, E40, F40

Where higher strength steel with minimum yield strength 315 N/mm^2 is used for grade 2Y, 3Y and 4Y electrodes, the actual tensile strength of the steel is to be not less than 490 N/mm^2. The chemical composition including the content of grain refining elements is to be reported.

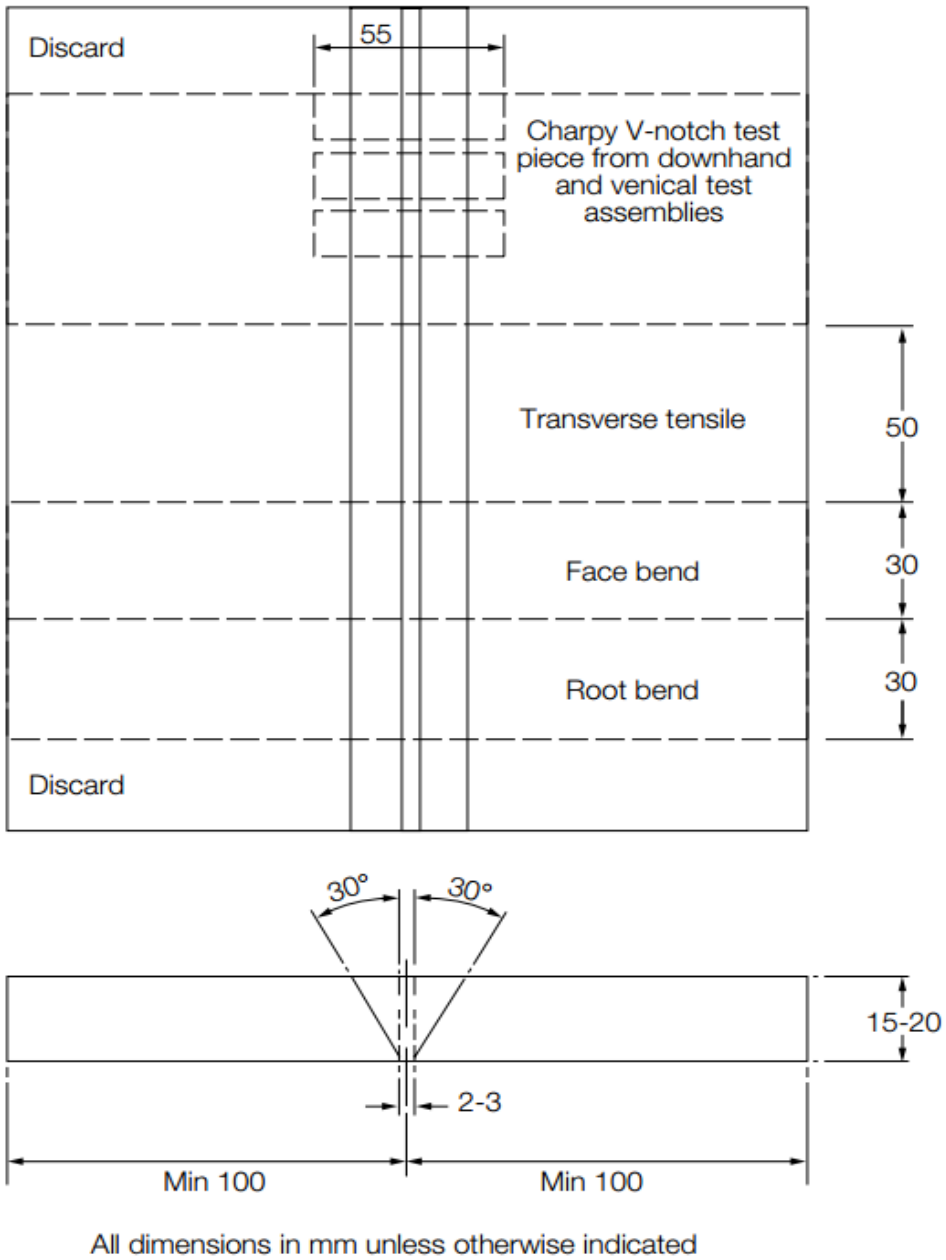

Figure 4.2 Butt weld test assembly

W17 (cont)

4.3.2 Sequence of welding

The following welding procedure is to be adopted in making test assemblies:

Downhand (a). The first run with 4 mm diameter electrode. Remaining runs (except the last two layers) with 5 mm diameter electrodes or above according to the normal welding practice with the electrodes. The runs of the last two layers with the largest diameter of electrode manufactured.

Downhand (b). (Where a second downhand test is required). First run with 4 mm diameter electrode. Next run with an electrode of intermediate diameter of 5 mm or 6 mm, and the remaining runs with the largest diameter of electrode manufactured.

Horizontal-vertical. First run with 4 mm or 5 mm diameter electrode. Subsequent runs with 5 mm diameter electrodes.

Vertical-upward and overhead. First run with 3.25 mm diameter electrode. Remaining runs with 4 mm diameter electrodes or possibly with 5 mm if this is recommended by the manufacturer for the positions concerned.

Vertical-downward. If the electrode tested is intended for vertical welding in the downward direction, this technique is to be adopted for the preparation of the test assembly using electrode diameters as recommended by the manufacturer.

For all assemblies the back sealing runs are to be made with 4 mm diameter electrodes in the welding position appropriate to each test sample, after cutting out the root run to clean metal. For electrodes suitable for downhand welding only, the test assemblies may be turned over to carry out the back sealing run.

Normal welding practice is to be used, and between each run the assembly is to be left in still air until it has cooled to less than 250°C but not below 100°C, the temperature being taken in the centre of the weld, on the surface of the seam. After welding, the test assemblies are not to be subjected to any heat treatment.

4.3.3 Radiographic examination

It is recommended that the welded assemblies be subjected to a radiographic examination to ascertain if there are any defects in the weld prior to the preparation of test specimens.

4.3.4 Execution of tests

The test specimens as shown in Figure 4.2 are to be prepared from each test assembly. Tests are to be performed according to Section 3 requirements.

4.3.5 Result of tests and requirements

The results of all tensile and impact tests are to comply with the requirements of table 4b as appropriate. The position of fracture in the transverse tensile test is to be reported. The bend test specimens can be considered as complying with the requirements if, after bending, no crack or defect having any dimensions exceeding 3 mm can be seen on the outer surface of the test specimen.

W17 (cont)

Table 4b Requirements for butt weld test (covered manual electrodes)

Grade	Tensile strength (transverse test) N/mm^2	Charpy V-notch impact tests		
		Test Temperature ^oC	Average energy - J minimum	
			Downhand, horizontal-vertical, overhead	Vertical (upward and downward)
1	400	20	47	34
2		0	47	34
3		-20	47	34
2Y	490	0	47	34
3Y		-20	47	34
4Y		-40	47	34
2Y40	510	0	47	39
3Y40		-20	47	39
4Y40		-40	47	39
5Y40		-60	47	39

4.4 Hot cracking test

4.4.1 Hot cracking test may be required at the discretion of each individual Society.

4.5 Hydrogen test

4.5.1 Hydrogen marks

At the request of the manufacturer, electrodes may be submitted to a hydrogen test. A suffix H15, H10 or H 5 will be added to the grade number to indicate compliance with the requirements of this test.

4.5.2 Execution of hydrogen test

The mercury method or thermal conductivity detector method according to standard ISO 3690:2018 is to be used. Four weld assemblies are to be prepared. The temperature of the specimens and minimum holding time are to be complied with following, according to the measuring method respectively:

Measuring Method		Test Temperature (^oC)	Minimum Holding Time (h)
Thermal Conductivity Detector Method (1)	Gas Chromatography	45	72
		150	6

Note (1) The use of hot carrier gas extraction method may be considered subject to verification of the testing procedure to confirm that collection and measurement of the hydrogen occurs continuously until all of the diffusible hydrogen is quantified.

The use of the glycerine method may be admitted at the Classification Society discretion. This method is described hereafter.

W17 (cont)

Four test specimens are to be prepared, measuring 12 mm by 25 mm in cross section by about 125 mm in length. The parent metal may be any grade of ship structural steel and, before welding, the specimens are to be weighed to the nearest 0.1 gram. On the 25 mm surface of each test specimen, a single bead of welding is to be deposited, about 100 mm in length by a 4 mm electrode, fusing 150 mm of the electrode. The welding is to be carried out with an arc as short as possible and with a current of about 150 amp.

The electrodes, prior to welding, can be submitted to the normal drying process recommended by the manufacturer. Within 30 seconds of the completion of the welding of each specimen the slag is to be removed and the specimen quenched in water at approximately 20°C.

After 30 seconds in the water, the specimen is to be cleaned and dried, and then placed in an apparatus suitable for the collection of hydrogen by displacement of glycerine. The glycerine is to be kept at a temperature of 45°C during the test. All four specimens are to be welded and placed in individual hydrogen collecting apparatus within a period of time which will limit any variation in hydrogen content due to variation in exposure to moisture absorption following any drying treatment. This should not exceed 30 minutes.

The specimens are to be kept immersed in the glycerine for a period of 48 hours and, after removal, are to be cleaned in water and spirit dried and weighed to the nearest 0.1 gram to determine the amount of weld deposit. The amount of gas involved is to be measured to the nearest 0.05 cm^3 and corrected for temperature and pressure to 0°C and 760 mm Hg.

4.5.3 Results to be obtained

The individual and average diffusible hydrogen contents of the four specimens are to be reported, and the average value in cm^3 per 100 grams is not to exceed the following:

Mark	Diffusible Hydrogen Contents	Measuring Method
H 15	15[1]	Mercury Method Thermal Conductivity Detector Method Glycerine Method
H 10	10[2]	
H 5	5	Mercury Method Thermal Conductivity Detector Method
[1] 10 cm^3 per 100 grams where the glycerine method is used. [2] 5 cm^3 per 100 grams where the glycerine method is used.		

Note: The glycerine method is not to be used for the welding consumables with H 5 mark.

4.6 Covered electrodes for manual fillet welding

4.6.1 General

Where an electrode is submitted only to approval for fillet welding and to which the butt weld test provided in 4.3 is not considered applicable, the first approval tests are to consist of the fillet weld tests given in 4.6.2, and deposited metal tests similar to those indicated in 4.2. Where an electrode is submitted to approval for both butt and fillet welding, the first approval tests may, at the discretion of the Classification Society, include one fillet weld test as detailed hereunder and welded in the horizontal-vertical position.

W17
(cont)

4.6.2 Fillet weld test assemblies

When the electrode is proposed only for fillet welding, fillet weld assemblies as shown in figure 4.3, are to be prepared for each welding position (horizontal-vertical, vertical upwards, vertical downwards or overhead) for which the electrode is recommended by the manufacturer. The length of the test assemblies L is to be sufficient to allow at least the deposition of the entire length of the electrode being tested.

The grade of steel used for the test assemblies is to be as detailed in 4.3.1.

The first side is to be welded using the maximum size of electrode manufactured and the second side is to be welded using the minimum size of electrode manufactured and recommended for fillet welding.

The fillet size will in general be determined by the electrode size and the welding current employed during testing.

4.6.3 Tests on fillet weld assemblies

.1 Macrographs
Each test assembly is to be sectioned to form three macro-sections each about 25mm thick. They are to be examined for root penetration, satisfactory profile, freedom from cracking and reasonable freedom from porosities and slag inclusions.

.2 Hardness
At the discretion of each Classification Society, the hardness of the weld, of the heat affected zone (HAZ) and of parent metal may be determined, and reported for information (see figure 4.4).

.3 Fracture
One of the remaining sections of the fillet weld is to have the weld on the first side gouged or machined to facilitate breaking the fillet weld, on the second side by closing the two plates together, submitting the root of the weld to tension. On the other remaining section, the weld on the second side is to be gouged or machined and the section fractured using the same procedure. The fractured surfaces are to be examined and there should be no evidence of incomplete penetration, or internal cracking and they should be reasonably free from porosity.

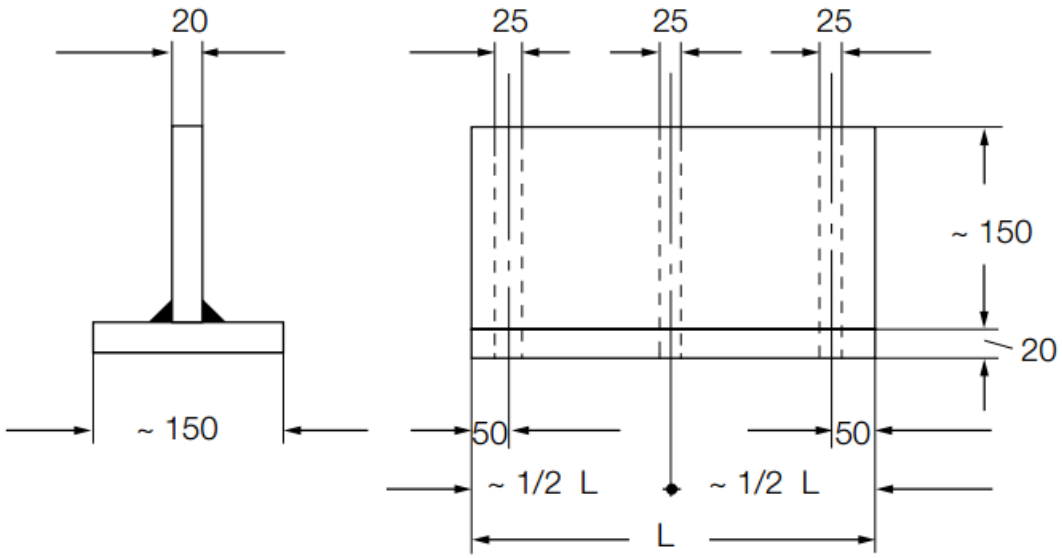

Figure 4.3 Fillet weld test assembly

W17
(cont)

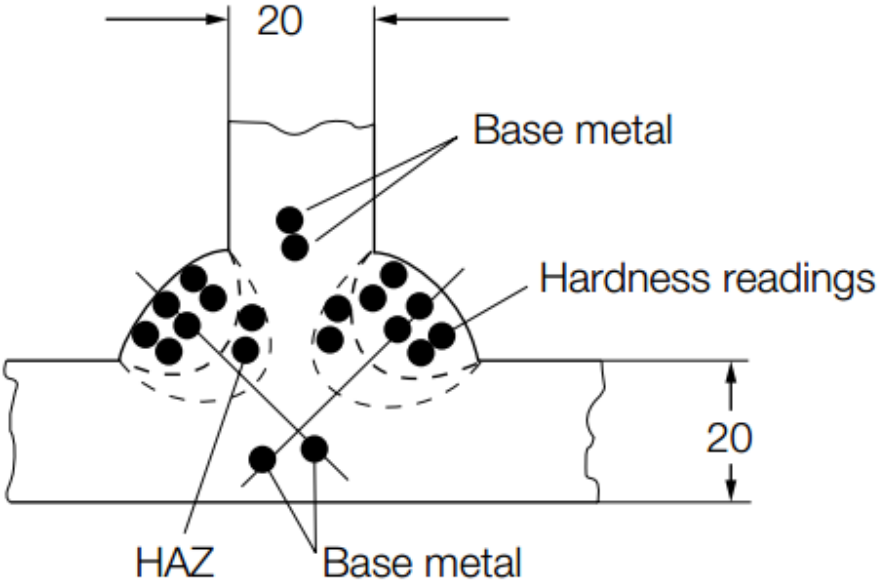

Figure 4.4 Hardness readings

4.7 Covered electrodes for gravity or contact welding

Where an electrode is submitted solely to approval for use in contact welding using automatic gravity or similar welding devices, deposited metal tests, fillet weld tests (see 4-6) and, where appropriate, but weld tests similar to those for normal manual electrodes are to be carried out using the process for which the electrode is recommended by the manufacturer.

Where a covered electrode is submitted to approval for use in contact welding using automatic gravity or similar welding devices in addition to normal manual welding, fillet weld and, where appropriate, butt weld tests, using the gravity of other contact device as recommended by the manufacturer, are to be carried out in addition to the normal approval tests.

In the case of a fillet welding electrode using automatic gravity or similar contact welding devices, the fillet welding should be carried out using the welding process recommended by the manufacturer, with the longest size of the electrode manufactured. The manufacturer's recommended current range is to be reported for each electrode size.

Where approval is requested for the welding of both normal strength and higher strength steel, the assemblies are to be prepared using higher strength steel.

4.8 Annual tests and upgrading

4.8.1 Annual tests and periodical inspection of manufacturer's plant
All establishments where approved electrodes are manufactured shall be subject to annual inspection.

The annual tests are to consist of at least the following:

.1 Covered electrode for normal manual arc welding

Two deposited metal test assemblies are to be prepared in accordance with 4.2. The mechanical properties (one tensile test, 3 Charpy-V impact tests on each assembly) are to be

W17 (cont)

in accordance with Table 4.a. This also applies to electrodes which are approved only for fillet welding.

At the discretion of the Society a butt weld test to be welded in down-hand or in vertical position, can be required in lieu of the deposited metal test 4 mm electrodes. Three Charpy V-notch impact test specimens are to be taken from the butt weld assembly.
For Mark H 10 and Mark H 5 covered electrodes, a hydrogen test following 4.5 can also be required for each annual test at the discretion of the Society.

.2 Covered electrodes for gravity or contact welding

Where an electrode is approved solely for gravity or contact welding, the annual test is to consist of one deposited metal test assembly using the gravity or other contact device as recommended by the manufacturer. If this electrode is approved also for normal manual arc welding the annual test is to be performed according to 4.8.1.1.

4.8.2 Upgrading and uprating of electrodes

.1 Upgrading and uprating will be considered only at the manufacturer's request, preferably at the time of annual testing. Generally, for this purpose, tests on butt-weld assemblies will be required in addition to the normal reapproval tests.

.2 Upgrading refers to notch toughness and consequently, only Charpy V impact tests are required from the respective butt-weld assemblies as required by 4-3 (downhand, horizontal vertical, vertical up or/and down, overhead, as applicable), and have to be performed at the upgraded temperature.

These butt-weld tests are to be made in addition to the normal requirements for annual deposited metal tests (which have, of course, to take into consideration the upgraded temperature for Charpy V specimens).

.3 Uprating refers to the extension of approval in order to cover the welding of higher strength steels; of course, welding of normal strength steels continue to be covered by the extended approval, as stated in 1.2.1.

For this purpose all butt-weld tests are to be made again, as required in 4.3 and using higher strength steel, as parent metal.

5. Wire flux combinations for submerged arc welding

5.1 General

5.1.1 Categories

Wire flux combinations for single electrode submerged arc automatic welding are divided into the following two categories:

- For use with the multi-run technique
- For use with the two run technique

Where particular wire-flux combinations are intended for welding with both techniques, tests are to be carried out for each technique.

W17 (cont)

5.1.2 Grades

Depending on the results of impact tests, wire-flux combinations are divided into the following grades:

- For normal strength steel: Grades 1, 2 or 3
- For higher strength steels with minimum yield strength up to 355 N/mm^2: Grades 1Y, 2Y, 3Y or 4Y.
- For higher strength steels with minimum yield strength up to 390 N/mm^2: Grades 2Y40, 3Y40, 4Y40 or 5Y40.

The suffixes T, M or TM will be added after the grade mark to indicate approval for the two-run technique, multi-run technique or both techniques, respectively.

5.1.3 Multiple electrode submerged arc welding

Wire-flux combinations for multiple electrode submerged arc welding will be subject to separate approval tests. They are to be carried out generally in accordance with the requirements of this section.

5.1.4 Mechanical tests on assemblies

Mechanical tests on assemblies with submerged arc welding for wire/flux approval are given in Table 5a.

5.2 Approval tests for multi-run technique

5.2.1 Grades of steel

Where approval for use with the multi-run technique is requested, deposited metal and butt weld tests are to be carried out.
For deposited metal test assembly any grade of ship structural steel may be used.
For butt weld test assembly one of the grades of steel as listed below for the individual grades of wire-flux combinations shall be used:

- Grade 1 wire-flux combinations: A
- Grade 2 wire-flux combinations: A, B, D
- Grade 3 wire-flux combinations: A, B, D, E
- Grade 1Y wire-flux combinations: A32, A36
- Grade 2Y wire-flux combinations: A32, A36, D32, D36
- Grade 3Y wire-flux combinations: A32, A36, D32, D36, E32, E36
- Grade 4Y wire-flux combinations: A32, A36, D32, D36, E32, E36, F32, F36
- Grade 2Y40 wire-flux combinations: A40, D40
- Grade 3Y40 wire-flux combinations: A40, D40, E40
- Grade 4Y40 wire-flux combinations: A40, D40, E40, F40
- Grade 5Y40 wire-flux combinations: A40, D40, E40, F40

W17 (cont)

5.2.2 Deposited metal test assembly

.1 Preparation

One deposited metal test assembly is to be prepared as shown in Figure 5.1

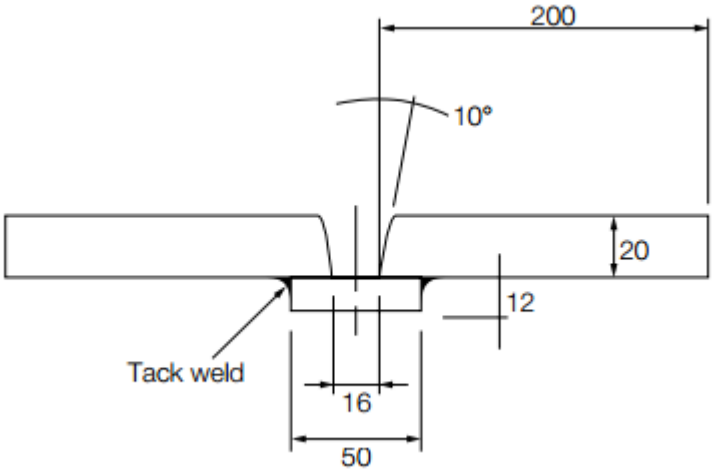

All dimensions in mm unless otherwise indicated

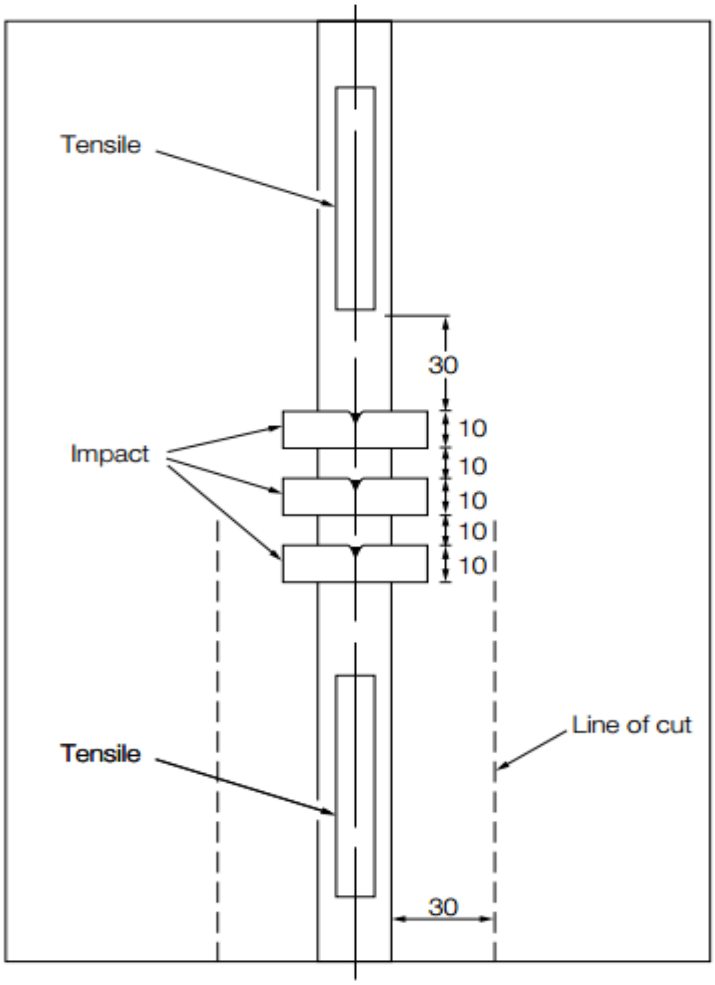

All dimensions in mm unless otherwise indicated

Figure 5.1

W17 (cont)

Table 5a General table giving the mechanical tests on assemblies with submerged arc welding for wire/flux approval

M (multi-run technique)		T (two-run technique)		TM (two-run and multi-run technique)			
Deposited metal assembly	Butt weld assembly	Butt weld assembly (minimum thickness)	Butt weld assembly (maximum thickness)	Deposited metal assembly	Butt Weld Assembly		
					Multi-run technique	Two-run technique	
						(Minimum thickness)	(Maximum thickness)
3 CV 2 LT	2 TT 4 TB 3 CV	2 TT 2 TB 3 CV	2 TT 2 TB 3 CV 1LT	3 CV 1 LT	2 TT 4 TB 3 CV	2 TT 2 TB 3 CV	2 TT 2 TB 3 CV 1 LT

Symbol Definition:
TT: Transverse Tensile Test on the butt weld assembly
TB: Transverse Bend Test on the butt weld assembly
CV: Charpy-V Impact Test in the axis of the weld
LT: Longitudinal Tensile Test in the weld

Welding is to be carried out in the downhand position, and the direction of deposition of each run is to alternate from each end of the plate. After completion of each run, the flux and welding slag is to be removed. Between each run the assembly is to be left in still air until it has cooled to less than 250 °C, but not below 100 °C, the temperature being taken in the centre of the weld, on the surface of the seam. The thickness of the layer is to be not less than the diameter of the wire nor less than 4 mm.

The weld conditions, including amperage, voltage and rate of travel speed are to be in accordance with the recommendations of the manufacturer and are to conform with normal good welding practice for multi-run welding.

.2 Chemical analysis
At the discretion of each individual Society, the chemical analysis of the deposited weld metal in this test assembly is to be supplied by the manufacturer and is to include the content of all significant alloying elements.

.3 Execution of tests
In accordance with Table 5a, the test specimens as shown in Figure 5.1 are to be prepared from each test assembly. Tests are to be performed according to Section 3 requirements.

.4 Results and requirements
The results of all tests are to comply with the requirements of Table 5b, as appropriate.

W17 (cont)

Table 5b Requirements for deposited metal tests (wire-flux combinations)

Grade	Yield stress N/mm^2 minimum	Tensile Strength N/mm^2	Elongation on 50 mm gauge length (L_o = 5 d) % minimum	Charpy V-notch impact tests	
				Test Temperature °C	Average Energy J minimum
1	305	400-560	22	20	34
2				0	34
3				-20	34
1Y	375	490-660	22	20	34
2Y				0	34
3Y				-20	34
4Y				-40	34
2Y40	400	510-690	22	0	39
3Y40				-20	39
4Y40				-40	39
5Y40				-60	39

5.2.3 Butt Weld Test Assembly

.1 Preparation

One butt weld test assembly is to be prepared as shown in Figure 5.2 in the downhand position by welding together two plates (20 to 25 mm thick), each not less than 150 mm in width and sufficient length to allow the cutting out of test specimens of the prescribed number and size.

The plate edges are to be prepared to form a single vee joint, the included angle between the fusion faces being 60° and the root face being 4 mm.

The welding is to be carried out by the multi-run technique and the welding conditions are to be the same as those adopted for the deposited metal test assembly.

The back sealing run is to be applied in the downhand position after cutting out the root run to clean metal.

After welding the test assembly is not to be subject to any heat treatment.

W17
(cont)

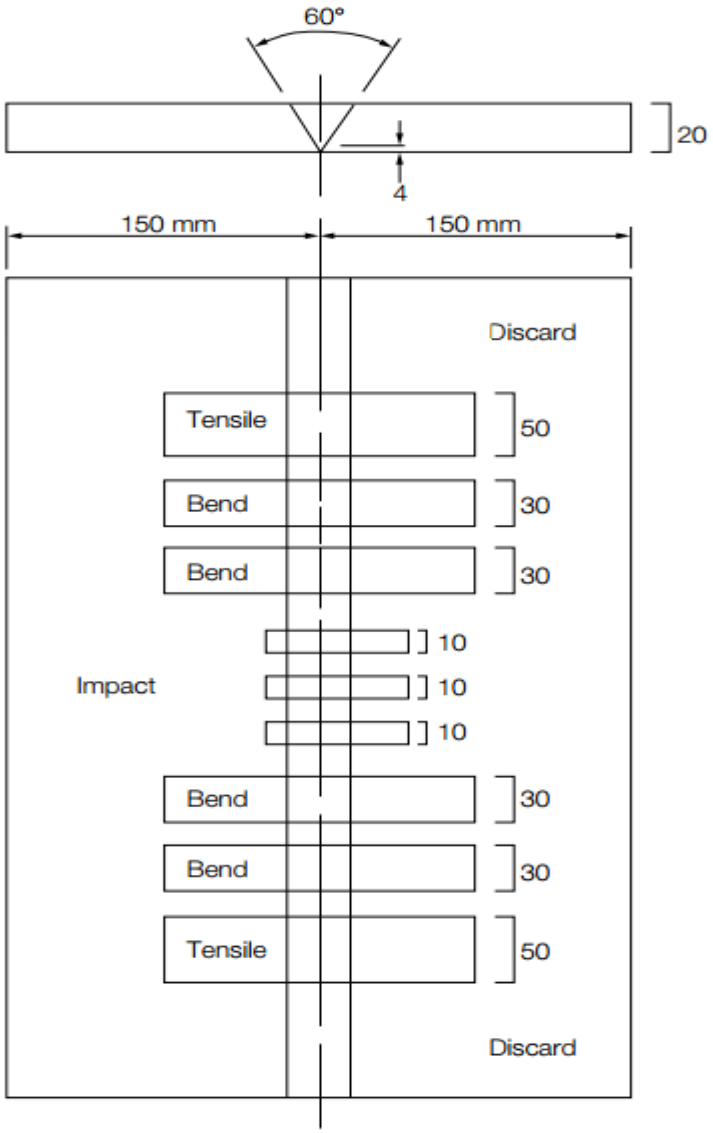

All dimensions in mm unless otherwise indicated

Figure 5.2 Multi-run butt weld test assembly (submerged arc welding)

.2 Radiographic examination
It is recommended that the welded assembly be subject to a radiographic examination to ascertain if there are any defects in the weld prior to the preparation of test specimens.

.3 Execution of tests
The test specimen to be prepared from the welded assembly are given in Table 5a and shown in Fig. 5.2. The tests are to be performed according to the requirements of Section 3.

.4 Results of tests and requirements
The results of all tensile and impact tests are to comply with the requirements of Table 5c as appropriate. The position of the fracture in the transverse tensile test is to be reported.

The bend test specimens can be considered as complying with the requirements if, after bending, no crack or defect, having any dimension exceeding 3 mm can be seen on the outer surface of the test specimen.

W17 (cont)

Table 5c Requirements for butt weld tests (wire-flux combinations)

Grade	Tensile strength (transverse test) N/mm^2	Charpy V-notch impact tests	
		Test temperature ^oC	Average energy J minimum
1	400	20	34
2		0	34
3		-20	34
1Y	490	20	34
2Y		0	34
3Y		-20	34
4Y		-40	34
2Y40	510	0	39
3Y40		-20	39
4Y40		-40	39
5Y40		-60	39

5.3 Approval tests for two run techniques

5.3.1 Number of test assemblies

Where approval for use with the two-run technique is requested, two butt weld test assemblies are to be prepared using the following thicknesses:

- For grades 1 and 1Y: 12 to 15 mm and 20 to 25 mm
- For Grades 2, 2Y, 3, 3Y and 4Y: 20 to 25 mm and 30 to 35 mm
- For Grades 2Y40, 3Y40, 4Y40 and 5Y40: 20 to 25 mm and 30 to 35 mm

A limitation of the approval to the medium range (up to the maximum welded plate thickness) may be agreed to by the Society. Test assemblies shall then be welded using plates of 12 to 15mm and 20 to 25mm irrespective of the grade for which the approval is requested.

When a wire-flux combination is offered to approval for use with the two-run technique only, it is reminded that no deposited metal test assemblies have to be done. In this case approval tests are limited to the butt welds on two-run assemblies described in 5.3.2 hereafter.

Where approval is requested for welding of both normal strength and higher strength steel two assemblies are to be prepared using higher strength steel. Two assemblies prepared using normal strength steel may also be required at the discretion of each Classification Society.

W17
(cont)

5.3.2 Butt weld test assemblies

.1 Preparation of assemblies

The maximum diameter of wire, grades of steel plate and edge preparation to be used are to be in accordance with Fig. 5.3. Small deviations in the edge preparation may be allowed if requested by the manufacturer. The root gap should not exceed 1 mm.

Each butt weld is to be welded in two runs, one from each side, using amperages, voltages and travel speeds in accordance with the recommendations of manufacturer and normal good welding practice.

After completion of the first run, the flux and welding slag are to be removed and the assembly is to be left in still air until it has cooled to 100°C, the temperature being taken in the centre of the weld, on the surface of the seam.

After welding, the test assemblies are not to be subjected to any heat treatment.

W17 (cont)

Plate thickness [mm]	Recommended preparation [mm]	Maximum diameter of wire [mm]	Grade wire-flux combination	Grade of normal strength steel	Grade of higher strength steel
about 12-15		5	1 1Y	A -	 A32, A36
about 20-25	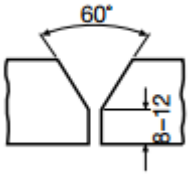	6	1 1Y 2 2Y 2Y40 3 3Y 3Y40 4Y 4Y40 5Y40	A - A, B or D - - A, B, D or E - - - - -	- A32, A36 - A32, A36, D32, D36 A40, D40 - A32, A36, D32 D36, E32, E36 A40, D40, E40 A32, A36, D32, D36, E32, E36, F32, F36 A40, D40, E40, F40 A40, D40, E40, F40
about 30-35	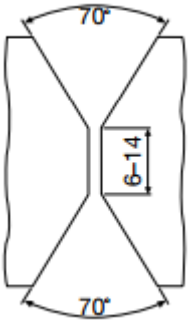	7	2 2Y 2Y40 3 3Y 3Y40 4Y 4Y40 5Y40	A, B or D - - A, B, D or E - - - - -	- A32, A36, D32, D36 A40, D40 - A32, A36, D32, D36, E32, E36 A40, D40, E40 A32, A36, D32, D36 E32, E36, F32, F36 A40, D40, E40, F40 A40, D40, E40, F40

Figure 5.3 Butt weld test assemblies (two-run technique)

.2 Radiographic examination

It is recommended that the welded assemblies are subjected to radiographic examination to ascertain if there are any defects in the weld prior to the preparation of test specimens.

.3 Execution of tests

W17 (cont)

The test specimens indicated in Table 5a and shown in Figure 5.4 are to be prepared from each test assembly. Tests are to be performed according to Section 3 requirements. The Charpy V-notch impact test specimens are to be machined from each welded assembly from the positions and with the orientations shown in Fig. 5.5.

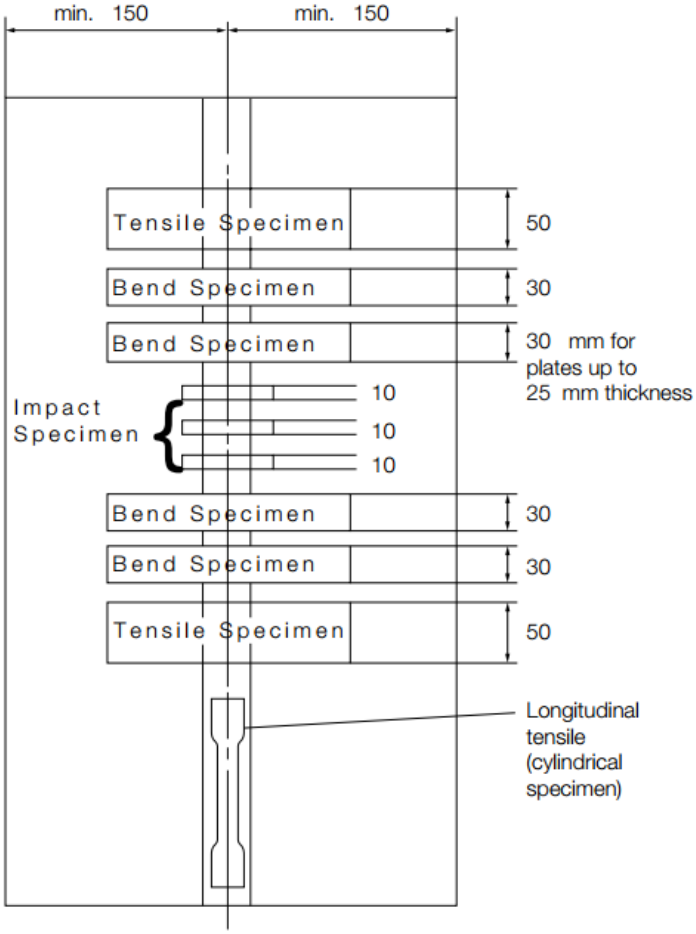

All dimensions in mm otherwise indicated

Figure 5.4

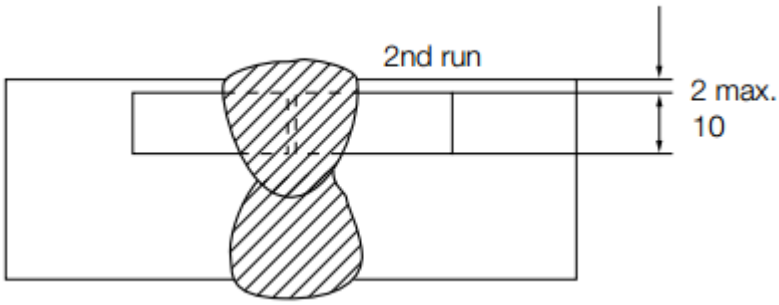

All dimensions in mm otherwise indicated

Figure 5.5

W17 (cont)

.4 Results of tests and requirements
The results of all tensile and impact tests are to comply with the requirements of table 5b and 5c as appropriate. The position of fracture in the transverse tensile test is to be reported. The bend test specimens can be considered as complying with the requirements if, after bending, no crack or defect having any dimensions exceeding 3 mm can be seen on the outer surface of the test specimen.

.5 Chemical analysis
The chemical analysis of the weld metal is to be supplied by the manufacturer, and is to include the content of all significant alloying elements.

5.4 Annual tests – upgrading

5.4.1 Annual tests

All establishments where approved wire/flux combinations are manufactured shall be subject to annual inspection.

Annual tests are to consist of at least the following:

a) multi-run technique: on deposited metal assembly and tests: 1 tensile and 3 impact tests.
b) two-run technique: one butt weld assembly with 20 mm minimum thickness plate and tests: 1 transverse tensile, 2 transverse bends and 3 impact tests. One longitudinal tensile test specimen is also to be prepared where the wire-flux combination is approved solely for the two-run technique.

The assemblies are to be prepared and tested in accordance with the requirements for initial approval.

Where a wire-flux combination is approved for welding both normal strength and higher strength steel, the latter steel is to be used for the preparation of the butt weld assembly required by 5.4.1 b).

5.4.2 Upgrading and rating

5.4.2.1 Upgrading of wire-flux combinations in connection with the impact properties will be considered as detailed in 4.8.2.2, and for wire-flux combinations approved for two runs welding, a butt-weld in the maximum thickness approved is to be made and sampled for Charpy-V testing in accordance with 5.3.2.3.

5.4.2.2 Uprating of wire-flux combinations in connection with the tensile properties will be considered as detailed in 4.6.2.3.

W17
(cont)

6. Wires and wire-gas combinations for metal arc welding

6.1 General

6.1.1 Categories

Wire-gas combinations and flux-cored or flux-coated wires (for use with or without a shielding gas) are divided into the following categories for the purposes of approval testing:

a) For use in semi-automatic multi-run welding.
b) For use in single electrode automatic multi-run welding.
c) For use in single electrode automatic two-run welding.

NOTE:
The term semi-automatic is used to describe processes in which the weld is made manually by a welder holding a gun through which the electrode wire is continuously fed.

6.1.2 Grades and suffixes

.1 Depending on the results of impact tests, wires and wire-gas combinations are divided into the following grades:

- For normal strength steel Grades 1, 2 and 3;
- For higher strength steels with minimum yield strength up to 355 N/mm^2: Grades 1Y, 2Y, 3Y and 4Y.
- For higher strength steels with minimum yield strength up to 390 N/mm^2: Grades 2Y40, 3Y40, 4Y40 and 5Y40.

.2 A suffix "S" will be added after the grade mark to indicate approval for semi-automatic multi-run welding.

.3 For wires intended for automatic welding, the suffixes "T", "M" or "TM" will be added after the grade mark to indicate approval for two-run, multi-run, or both welding techniques, respectively.

.4 For wires intended for both semi-automatic and automatic welding, the suffixes will be added in combination.

6.1.3 Composition of shielding gas

.1 Where applicable, the composition of the shielding gas is to be reported. Unless otherwise agreed by the Society, additional approval tests are required when a shielding gas is used other than that used for the original approval tests.

.2 The approval of a wire in combination with any particular gas can be applied or transferred to any combination of the same wire and any gas in the same numbered group as defined in Table 6a, subject to the agreement of the Classification Society.

W17 (cont)

Table 6a Compositional limits of designated groups of gas types and mixtures.

Group		Gas composition (Vol. %)			
		Co_2	O_2	H_2	A_r
M1	1	> 0 to 5	-	> 0 to 5	Rest 1) 2)
	2	> 0 to 5	-	-	Rest 1) 2)
	3	-	> 0 to 3	-	Rest 1) 2)
	4	> 0 to 5	> 0 to 3	-	Rest 1) 2)
M2	1	> 5 to 25	-	-	Rest 1) 2)
	2	-	> 3 to 10	-	Rest 1) 2)
	3	> 5 to 25	> 0 to 8	-	Rest 1) 2)
M3	1	> 25 to 50	-	-	Rest 1) 2)
	2	-	> 10 to 15	-	Rest 1) 2)
	3	> 5 to 50	> 8 to 15	-	Rest 1) 2)
C	1	100	-	-	-
	2	Rest	> 0 to 30	-	-

1) Argon may be substituted by Helium up to 95% of the Argon content.
2) Approval covers gas mixtures with equal or higher Helium contents only.

6.1.4 Low hydrogen approval

.1 Flux-cored or flux-coated wires which have satisfied the requirements for Grades 2, 2Y, 2Y40, 3, 3Y, 3Y40, 4Y, 4Y40 and 5Y40 may, at manufacturer's option, be submitted to the hydrogen test as detailed in 4.5, using the manufacturer's recommended welding conditions and adjusting the deposition rate to give a weight of weld deposit per sample similar to that deposited when using manual electrodes.

.2 A suffix H15, H10 or H5 will be added to the grade mark, in the same conditions as for manual arc welding electrodes (see 4.5.3 above) to indicate compliance with the requirements of the test.

6.2 Approval for semi-automatic multi-run welding

6.2.1 General

Approval tests for semi-automatic multi-run welding are to be carried out generally in accordance with Section 4, except as required by 6.2, using the semi-automatic multi-run technique for the preparation of all test assemblies.

6.2.2 Preparation of deposited metal assemblies

.1 Two deposited metal test assemblies are to be prepared in the downhand position as shown in Fig. 4.1, one using the smallest diameter, and the other using the largest diameter of wire intended for the welding of ship structures. Where only one diameter is manufactured, only one deposited metal assembly is to be prepared.

.2 The weld metal is to be deposited according to the practice recommended by the manufacturer, and the thickness of each layer of weld metal is to be between 2 and 6 mm.

6.2.3 Chemical analysis

The chemical analysis of the deposited weld metal in each test assembly is to be supplied by the manufacturer, and is to include the content of all significant alloying elements.

W17 (cont)

6.2.4 Mechanical tests

On each assembly, tests are to be made in accordance with 4.2.3, and the results are to comply with the requirements of 4.2.4, appropriate to the required grade.

6.2.5 Preparation of butt weld assemblies

.1 Butt weld assemblies as shown in Fig. 4.2 are to be prepared for each welding position (downhand, horizontal-vertical, vertical upwards, vertical downwards and overhead) for which the wire or wire-gas combination is recommended by the manufacturer.

.2 The downhand assembly is to be welded using, for the first run, wire of the smallest diameter to be approved and, for the remaining runs, wire of the largest diameter to be approved.

.3 Where approval is requested only in the downhand position, an additional butt weld assembly is to be prepared in that position using wires of different diameter from those required by 6.2.5.2. Where only one diameter is manufactured, only one downhand butt weld assembly is to be prepared.

.4 The butt weld assemblies in positions other than downhand, are to be welded using, for the first run, wire of the smallest diameter to be approved, and, for the remaining runs, the largest diameter of wire recommended by the manufacturer for the position concerned.

6.2.6 Radiographic examination

It is recommended that the welded assemblies are subjected to radiographic examination to ascertain if there are any defects in the welds prior to the preparation of test specimens.

6.2.7 On each assembly, tests are to be made in accordance with 4.3.4, and the results are to comply with the requirements of 4.3.5.

6.2.8 Fillet weld tests

Fillet weld test assemblies are required to be made in accordance with 4.6.1 and 4.6.2, and tested in accordance with 4.6.3.

6.3 Approval for automatic multi-run welding

6.3.1 General

Approval tests for automatic multi-run welding are to be carried out generally in accordance with section 5 multi-run approval, except as required by 5.2, using the automatic multi-run technique for the preparation of all test assemblies.

6.3.2 Preparation of deposited metal assembly

One deposited metal assembly is to be prepared as shown in Fig. 5.1. Welding is to be as detailed in 5.2.2.1, except that the thickness of each layer is to be not less than 3 mm.

6.3.3 Chemical analysis

The chemical analysis of the deposited weld metal in this test assembly is to be supplied by the manufacturer, and is to include the content of all significant alloying elements.

W17
(cont)

6.3.4 Mechanical tests

Tests on this assembly are to be made in accordance with 5.2.2.3, and the results are to comply with the requirements of 5.2.2.4.

6.3.5 Preparation of butt weld assemblies

One butt weld assembly is to be prepared in each welding position which is to be approved. Generally, this will be the downhand position only, in which case only one assembly is required. Preparation of the assembly is to be in accordance with 5.2.3.1.

6.3.6 Radiographic examination

It is recommended that each assembly be subjected to a radiographic examination to ascertain any defect in the weld prior to testing.

6.3.7 Mechanical tests

Tests are to be made on each assembly in accordance with 5.2.3.3 and the results are to comply with the requirements of Table 5c. Where more than one assembly is prepared and tested, the number of transverse tensile and bend test specimens from each assembly may be halved.

6.3.8 Discretionary approval

At the discretion of each individual Classification Society, wires or wire-gas combinations approved for semi-automatic multi-run welding may also be approved, without additional tests, for automatic multi-run welding approval.

This is generally the case when automatic multi-run welding is performed in the same conditions of welding current and energy as semi-automatic welding with the concerned wire-gas combination.

The only difference between the two welding processes in this case is that the welding gun is held by an automatic device instead of the welder's hand.

6.4 Approval for automatic two-run welding

6.4.1 General

Approval tests for automatic two-run welding are to be carried out generally in accordance with the requirements of Section 5.3, except as required by 6.4, using the automatic two-run welding technique for the preparation of all test assemblies.

6.4.2 Preparation of butt weld assemblies

.1 Two butt weld test assemblies are to be prepared, generally as detailed in 5.3.1 and 5.3.2, using plates 12-15 mm and 20-25 mm in thickness. If approval is requested for welding plate thicker than 25 mm, one assembly is to be prepared using plates approximately 20 mm in thickness and the other using plates of the maximum thickness for which approval is requested.

.2 The plate preparation of the test assemblies is to be as shown in Fig. 6.1. Small deviations in the edge preparation may be allowed, if requested by the manufacturer. For assemblies using plates over 25 mm in thickness, the edge preparation is to be reported for

W17 (cont)

information. Deviations or variations will be expected to form part of the manufacturer's standard recommended procedure for this technique and thickness range.

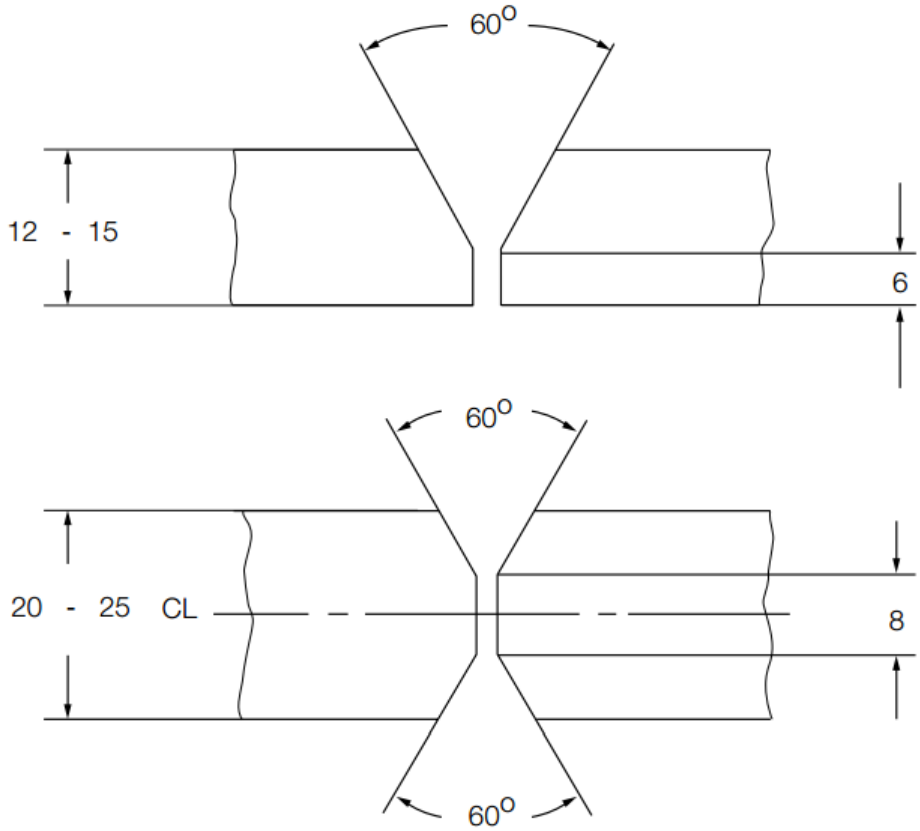

All dimensions in mm unless otherwise indicated

Figure 6.1 Recommended edge preparation for two-run butt weld test assemblies

.3 The diameters of wires used are to be in accordance with the recommendations of the manufacturer and are to be reported.

6.4.3 Radiographic examination

It is recommended that the welded assemblies be subjected to radiographic examination to ascertain any defect in the weld prior to testing, and to confirm full penetration continuously along the major part of the welded length of each assembly.

6.4.4 Mechanical tests

Tests are to be made on each assembly in accordance with 5.3.2.3 to 5.3.2.6 and the results are to comply with the requirements of 5.2.2.4 and Table 5c.

6.4.5 Chemical analysis

The chemical analysis of the deposited weld metal on the second side welded, is to be reported for each assembly.

W17
(cont)

6.5 Annual tests and up-grading

6.5.1 Annual tests

.1 Annual tests are to consist of at least:

a) Wires approved for semi-automatic or both semi-automatic and automatic multi-run welding : one deposited metal test assembly prepared in accordance with 6.2.2 using a wire of diameter within the range approved for the semi-automatic multi-run welding of ship structures.

b) Wires approved for automatic multi-run welding: one deposited metal test assembly prepared in accordance with 6.3.2 using a wire of diameter within the range approved for automatic multi-run welding of ship structures.

c) Wires approved for automatic two-run welding: one butt weld test assembly prepared in accordance with 6.4.2 using plates of 20-25 mm in thickness. The wire diameter used is to be reported.

.2 The test specimens are to be prepared and tested in accordance with the requirements of this Section, except that only the following tests are required:

a) For deposited metal assemblies (semi-automatic and automatic multi-run): one tensile and three impact tests.

b) For butt weld assemblies (automatic two-run): one transverse tensile, two bend and three impact tests. One longitudinal tensile test is also required where the wire is approved solely for automatic two-run welding.

Note:
At the discretion of each individual Classification Society, hydrogen test can be carried out following 4.5.

6.5.2 Up-grading and up-rating

.1 Up-grading of flux cored wires and wire-gas combinations in connection with the impact properties will be considered as detailed in 4.8.2.2.

.2 Up-rating of flux cored wires and wire-gas combinations with the tensile properties will be considered as detailed in 4.8.2.3.

W17
(cont)

7. Consumables for use in eletroslag and electrogas vertical welding

7.1 General

7.1.1 The requirements for the two-run technique as detailed in Section 5 are applicable for the approval of special consumables used in electro-slag and electro-gas vertical welding with or without consumable nozzles except as otherwise required by the following requirements especially as regards the number and kind of the test-pieces used for the mechanical tests and taken from the butt welded assemblies.

7.1.2 For Grades 1Y, 2Y, 3Y, 4Y, 2Y40, 3Y40, 4Y40 and 5Y40 approval of the consumables may be restricted for use only with specific types of higher strength steel. This is in respect of the content of grain refining elements, and if general approval is required, a niobium treated steel is to be used for the approval tests.
7.1.3 For these special welding consumables, the prescription 1.2.1 may not be entirely applicable for technical reasons.

Where approval is requested for welding of both normal strength and higher strength steel two assemblies are to be prepared using higher strength steel. Two assemblies prepared using normal strength steel may also be required at the discretion of each Classification Society.

7.2 Butt weld tests

7.2.1 Preparation of test assemblies

Two butt weld test assemblies are to be prepared, one of them with plates 20/25 mm thick, the other with plates 35/40 mm thick or more. The grade of the steel to be used for each one of these assemblies must be selected according to the requirements given in the figure 5.3 for two-run submerged arc welding.

The chemical composition of the plate, including the content of grain refining elements is to be reported.

The welding conditions and the edge preparation are to be those recommended by the welding consumable manufacturer and are to be reported.

7.2.2 Radiographic examination

It is recommended that the welded assemblies be subjected to a radiographic examination to ascertain if there are any defects in the weld prior to the preparation of test specimens.

7.2.3 Test series

Each assembly shall be cut to give test specimens according to Figure 7.1.

The length of the assembly should be sufficient to allow the selection of all the test specimens:

- 2 longitudinal tensile test specimens with their axis at the centre of the weld.
- 2 transverse tensile test specimens.
- 2 side bend test specimens.
- 2 sets of 3 Charpy-V notch impact test specimens in accordance with Figure 7.1:

  .1 set with the notch in the axes of the weld,

W17 (cont)

.1 set with the notch at 2 mm from the fusion line in the deposited metal.

- 2 macro-sections to the weld (towards the middle of the weld and towards one end).

7.2.4 Results to be obtained

The results of the tensile, bend and impact tests are to comply with the requirements of paragraph 5.3 (two-run welding) for the class of filler product in question.

7.3 Annual tests and up-grading

7.3.1 All factories which manufacture approved consumables for use in electroslag and electrogas welding must be subject to an annual inspection and tests in accordance with 2.4.

7.3.2 One test assembly must be prepared from plates 20/25 mm thick, and tested as indicated in 7.2.
The following specimens are to be selected:

- 1 longitudinal tensile specimen from the axis of the weld,
- 1 transverse tensile specimen,
- 2 side bend specimens,
- 3 Charpy-V specimens notched at the centre of the weld (position 1 Fig. 7.1),
- 3 Charpy-V specimens cut out transverse to the weld with their notches at 2 mm from the fusion line, in the weld,
- macro section.

7.3.3 The results to be obtained should meet the requirements given in 5.3 (two-run welding) for the class of the consumables in question.

7.3.4 Upgrading and uprating

Upgrading and uprating will be considered only at the manufacturers' request, at the time of annual testing. Generally, for this purpose, full tests from butt weld assemblies as indicated in 7.2 will be required, irrespective of the other tests requested if the concerned consumable is also approved (and possibly upgraded or uprated) according to Section 5 or Section 6.

W17
(cont)

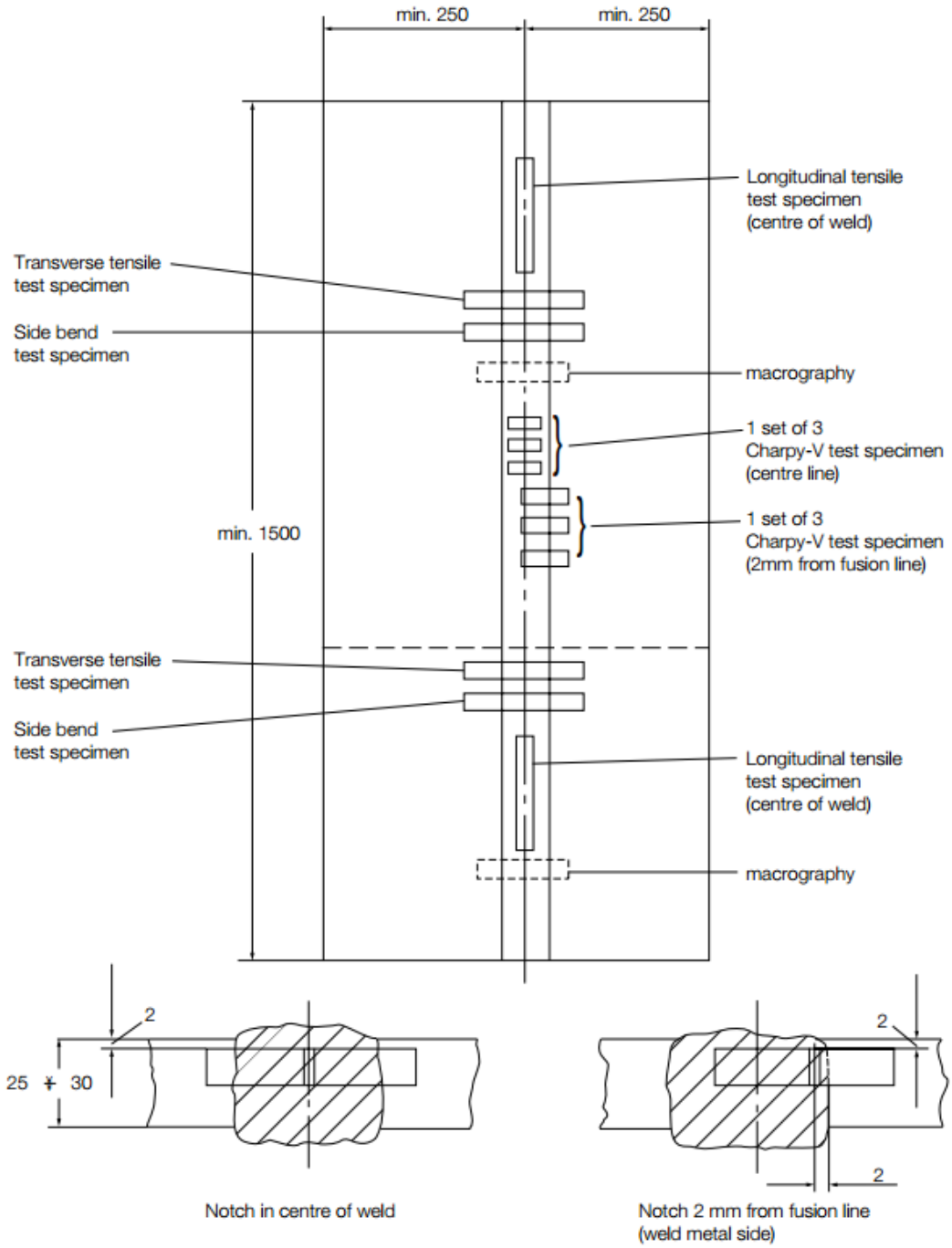

Figure 7.1 Electroslag and electrogas butt weld test assembly

End of Document

W18 Anchor chain cables and accessories including chafing chain for emergency towing arrangements

(1988) (Rev.1 1997) (Rev.2 July 1999) (Rev.3 July 2002) (Rev.4 July 2003) (Rev.5 May 2004) (Rev.6 Sep 2021)

W18.1 General requirements

1.1 Scope

These rules apply to the materials, design, manufacture and testing of stud link anchor chain cables and accessories used for ships. Where, in exceptional cases, studless short link chain cables are used with the consent of the individual Society, they must comply with recognized national or international standards. The requirements for chafing chain for Emergency Towing Arrangements (ETA) are given in the Appendix A.

1.2 Chain cable grades

Depending on the nominal tensile strength of the chain cable steel used for manufacture, stud link chain cables are to be subdivided into Grades 1, 2 and 3.

1.3 Approval of chain manufacturers

1.3.1 Anchor chain cables and accessories are to be manufactured only by works approved by the Society. For this purpose approval tests are to be carried out, the scope of which is to be agreed with the Society.

1.3.2 Applications for approval are to be made to the Society, stating the method of manufacture used, the grades of materials, the nominal dimensions and - where applicable - the material specification. A procedure test carried out on a high-strength chain cable may cover approval of lesser grades, provided that the material type, method of manufacture and the nature of the heat treatment are the same.

Note:

1. Changes introduced in Rev.6 are to be uniformly implemented by IACS Societies on ships contracted for construction on or after 1 January 2023, or when the application for certification of steel products is dated on or after 1 January 2023, or the application for certification of manufacturer approval is dated on or after 1 January 2023.

2. The “contracted for construction” date means the date on which the contract to build the vessel is signed between the prospective owner and the shipbuilder. For further details regarding the date of “contract for construction”, refer to IACS Procedural Requirement (PR) No. 29.

W18 (cont)

W18.2 Materials

2.1 Scope

These rules apply to rolled steels, forgings and castings used for the manufacture of anchor chain cables and accessories.

2.2 Requirements for material manufacturers

2.2.1 All materials used for the manufacture of anchor chain cables and accessories are to be supplied by manufacturers approved by the Society. Society approval is not required for Grade 1 steel bars.

2.2.2 Materials suppliers or chain cable manufacturers are to submit specifications for Grade 3 steel bars. These specifications should contain all necessary details, such as manufacturing procedure, deoxydation practice, specified chemical composition, heat treatment, and mechanical properties.

2.3 Rolled steel bars

2.3.1 Supply condition

Unless otherwise stipulated, the steel bars will be supplied in as rolled condition.

2.3.2 Chemical composition

The chemical composition of the steel bars is to be generally within the limits given in Table 1.

Table 1 Chemical composition of rolled steel bars

Grade	Chemical composition in maximum percent, unless specified.					
	C	Si	Mn	P	S	Al tot [1] min.
1	0.20	0.15-0.35	min. 0.40	0.040	0.040	NR
2[2]	0.24	0.15-0.55	1.60	0.035	0.035	0.020
3[3]	In accordance with an approved specification					

[1] Aluminum may be replaced partly by other grain refining elements.
[2] If the Society agrees, additional alloying elements may be added.
[3] To be killed and fine grain.
NR = Not required.

2.3.3 Mechanical tests

2.3.3.1 Mechanical tests representing the steel bars are normally to be carried out by the steel mill, and the results are to meet the requirements in Table 2. The test coupons are to be in a heat treatment condition equivalent to that of the finished chain cable and accessories.

W18 (cont)

Table 2 Mechanical properties of rolled steel bars

Grade	R_{eH} N/mm^2 min.	R_m N/mm^2	A_5 % min.	Z % min.	Charpy V-notch impact test	
					Test temp. in °C	Absorbed energy in Joules, min.
1	NR	370-490	25	NR	NR	NR
2	295	490-690	22	NR	0	27[1)]
3	410	min. 690	17	40	0[2)]	60
					-20	35

[1)] The impact test of Grade 2 materials may be waived, if the chain cable is to be supplied in a heat treated condition as per Table 6.

[2)] Testing is normally to be carried out at 0°C.

NR = Not required.

2.3.3.2 For performance of the mechanical tests the steel bars shall be sorted according to heats and diameters into test units not exceeding 50 tons each. From each test unit a test sample shall be taken for the tests mentioned in 2.3.3.4 and 2.3.3.5. Prior to sampling, the test samples must be subjected to the heat treatment provided for the finished chain cable; see Section 3.3. Details of the heat treatment must be indicated by the chain cable manufacturer.

2.3.3.3 Tensile and Charpy V-notch impact test specimens shall be taken from the test sample in the longitudinal direction at a distance of 1/6 diameter from the surface or as close as possible to this position, as shown in Figure 1.

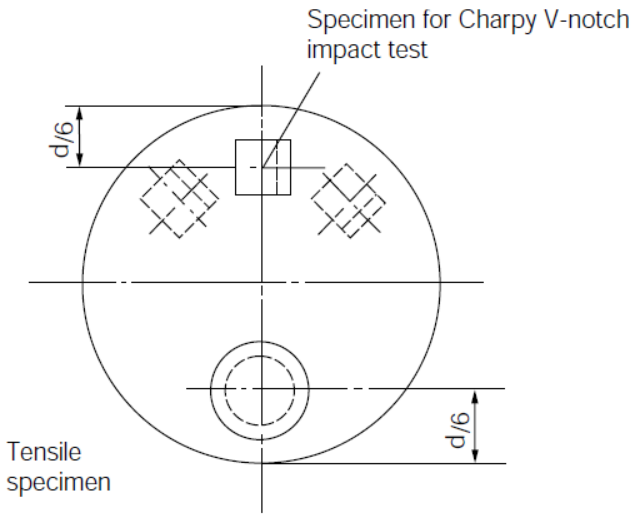

Figure 1 Sampling Locations

W18 (cont)

2.3.3.4 For the tensile test, one specimen shall be taken from each test unit and tested, all in accordance with UR W2.

2.3.3.5 One set of longitudinal Charpy V-notch test specimens shall be taken from each test unit and tested at the temperature prescribed in Table 2, all in accordance with UR W2. The specimen transverse axis is to be radial to the steel bar. The average value obtained from one set of three impacts specimens is to comply with the requirements given in Table 2. One individual value only may be below the specified average value provided it is not less than 70% of that value.

2.3.3.6 Re-test requirements for tensile tests are to be in accordance with UR W2 with specimens taken from the same sample. Failure to meet the specified requirements of either of both additional tests will result in rejection of the test unit represented unless it can be clearly attributable to improper simulated heat treatment; see 2.3.3.8.

2.3.3.7 Re-test requirements for Charpy impact tests are to be in accordance with UR W2. Specimens are to be selected from the same sample. Failure to meet the requirements will result in rejection of the test unit represented unless it can be clearly attributable to improper simulated heat treatment; see 2.3.3.8.

2.3.3.8 If failure to pass the tensile test or the Charpy V-notch impact test is definitely attributable to improper heat treatment of the test sample, a new test sample may be taken from the same piece and reheat treated. The complete test (both tensile and impact test) is to be repeated; and the original results obtained may be disregarded.

2.3.4 Dimensional tolerances

The diameter and roundness shall be within the tolerances specified in Table 3 unless otherwise agreed.

Table 3 Dimensional tolerance of rolled steel bars

Nominal diameter mm	Tolerance on diameter mm	Tolerance on roundness (d_{max} - d_{min}) mm
less than 25	-0 + 1.0	0.6
25 - 35	-0 + 1.2	0.8
36 - 50	-0 + 1.6	1.1
51 - 80	-0 + 2.0	1.5
81 - 100	-0 + 2.6	1.95
101 - 120	-0 + 3.0	2.25
121 - 160	-0 + 4.0	3.00

2.3.5 Freedom from defects

The materials have to be free from internal and surface defects that might impair proper workability and use. Surface defects may be repaired by grinding, provided the admissible tolerance is not exceeded.

W18 (cont)

2.3.6 Identification of material

Manufacturers are to effectively operate an identification system ensuring traceability of the material to the original cast.

2.3.7 Marking

The minimum markings required for the steel bars are the manufacturers' brandmark, the steel grade and an abbreviated symbol of the heat. Steel bars having diameters of up to and including 40 mm and combined into bundles, may be marked on permanently affixed labels.

2.3.8 Material certification

Bar material for Grade 2 or Grade 3 is to be certified by the Society. For each consignment manufacturers shall forward to the Surveyor a certificate containing at least the following data:

– manufacturer's name and/or purchaser's order No.
– number and dimensions of bars and weight of consignment
– steel specification and chain grade
– heat number
– manufacturing procedure
– chemical composition
– details of heat treatment of the test sample (where applicable)
– results of mechanical tests (where applicable)
– number of test specimens (where applicable)

2.4 Forged steels for chain cables and accessories

2.4.1 General requirements

Forged steels used for the manufacture of chain cables and accessories are to be in compliance with UR W7, Hull and machinery steel forgings, unless otherwise specified in the following paragraphs.

2.4.2 Chemical composition

The chemical composition is to comply with the specification approved by the Society. The steel manufacturer must determine and certify the chemical composition of every heat of material.

2.4.3 Heat treatment

The stock material may be supplied in the as rolled condition. Finished forgings are to be properly heat treated, i.e. normalized, normalized and tempered or quenched and tempered, whichever is specified for the relevant steel grade in Table 4.

2.5 Cast steels for chain cables and accessories

2.5.1 General requirements

Cast steels used for the manufacture of chain cables and accessories are to be in compliance with UR W8, Hull and machinery steel castings, unless otherwise specified in the following paragraphs.

2.5.2 Chemical composition

W18 (cont)

The chemical composition is to comply with the specification approved by the Society. The foundry is to determine and certify the chemical composition of every heat.

2.5.3 Heat treatment

All castings must be properly heat treated, i.e., normalized, normalized and tempered or quenched and tempered, whichever is specified for the relevant cast steel grade in Table 4.

2.6 Materials for studs

The studs are to be made of steel corresponding to that of the chain cable or from rolled, cast or forged mild steels. The use of other materials, e.g. grey or nodular cast iron is not permitted.

W18.3 Design and manufacture of chain cables and accessories

3.1 Design

Chain cables must be designed according to a standard recognized by the Society, such as 1704:2008. A length of chain cable must comprise an odd number of links. Where designs do not comply with this and where accessories are of welded construction, drawings giving full details of the design, the manufacturing process and the heat treatment are to be submitted to the Society for approval.

3.2 Dimensions and dimensional tolerances

3.2.1 The shape and proportions of links and accessories must conform to a recognized standard, such as ISO 1704:2008 or the designs specially approved.

3.2.2. The following tolerances are applicable to links:

a) Diameter measured at the crown (Two measurements are to be taken at the same location: one in the plane of the link{see dp in Figure 2}, and one perpendicular to the plane of the link):

up to 40mm nominal diameter	: – 1mm
over 40 up to 84mm nominal diameter	: – 2mm
over 84 up to 122mm nominal diameter	: – 3mm
over 122mm nominal diameter	: – 4mm

The plus tolerance may be up to 5% of the nominal diameter. The cross sectional area of the crown must have no negative tolerance.

b) Diameter measured at locations other than the crown:

The diameter is to have no negative tolerance. The plus tolerance may be up to 5% of the nominal diameter. The approved manufacturer's specification is applicable to the plus tolerance of the diameter at the flush-butt weld.

c) The maximum allowable tolerance on assembly measured over a length of 5 links may equal +2.5%, but may not be negative (measured with the chain under tension after proof load test).

W18 (cont)

d) All other dimensions are subject to a manufacturing tolerance of ±2.5%, provided always that all of the final link parts of the chain cable fit together properly.

e) Studs must be located in the links centrally and at right angles to the sides of the link, although the studs at each end of any length may also be located off-centre to facilitate the insertion of the joining shackle. The following tolerances are regarded as being inherent in the method of manufacture and will not be objected to provided that the stud fits snugly and its ends lie practically flush against the inside of the link.

Maximum off-centre distance "X" : 10% of the nominal diameter d
Maximum deviation "α" from the 90° - position : 4°
The tolerances are to be measured in accordance with Figure 2.

3.2.3 The following tolerances are applicable to accessories:

nominal diameter : + 5%, -0%
other dimentions : + 2.5%

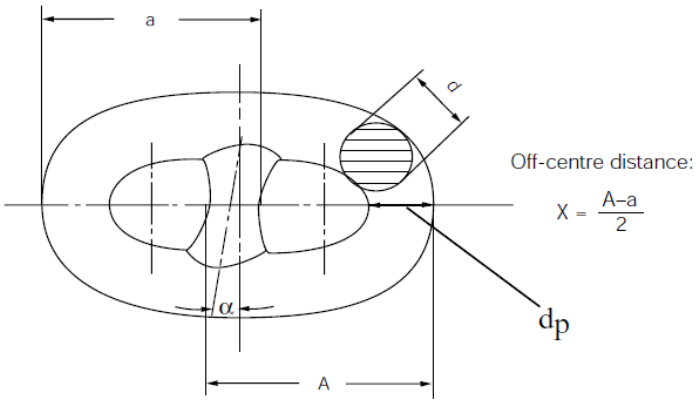

Figure 2 Manufacturing tolerances

3.3 Manufacturing process

3.3.1 Stud link chain cables should preferably be manufactured by flash butt welding using Grade 1, 2 or 3 bar material. Manufacture of the links by drop forging or castings is permitted. On request, pressure butt welding may also be approved for studless, Grade 1 and 2 chain cables, provided that the nominal diameter of the chain cable does not exceed 26mm.

3.3.2 Accessories such as shackles, swivels and swivel shackles are to be forged or cast in steel of at least Grade 2. The welded construction of these parts may also be approved.

3.4 Welding of studs

The welding of studs is to be in accordance with an approved procedure subject to the following conditions:

a) The studs must be of weldable steel; cf. 2.6.
b) The studs are to be welded at one end only, i.e., opposite to the weldment of the link. The stud ends must fit the inside of the link without appreciable gap.
c) The welds, preferably in the horizontal position, shall be executed by qualified welders using suitable welding consumables.
d) All welds must be carried out before the final heat treatment of the chain cable.

W18 (cont)

e) The welds must be free from defects liable to impair the proper use of the chain. Under-cuts, end craters and similar defects shall, where necessary, be ground off.

The Society reserves the right to call for a procedure test for the welding of chain studs.

3.5 Heat treatment

According to the grade of steel, chain cables and accessories are to be supplied in one of the conditions specified in Table 4. The heat treatment shall in every case be performed before the proof load test, the breaking load test, and all mechanical testing.

The mechanical properties of finished chain cables and accessories are to be in accordance with Table 7.

Table 4 Condition of supply of chain cables and accessories

Grade	Chain cables	Accessories
1	As welded or Normalized	NA
2	As welded or Normalized 1)	Normalized
3	Normalized, Normalized and tempered or Quenched and tempered	Normalized, Normalized and tempered or Quench and tempered

1) Grade 2 chain cables made by forging or casting are to be supplied in the normalized condition.

NA = Not Applicable.

3.6 Freedom from defects

3.6.1 All individual parts must have a clean surface consistent with the method of manufacture and be free from cracks, notches, inclusions and other defects imparing the performance of the product. The flashes produced by upsetting or drop forging must be properly removed.

3.6.2 Minor surface defects may be ground off so as to leave a gentle transition to the surrounding surface. Remote from the crown local grinding up to 5% of the nominal link diameter may be permitted.

W18.4 Testing and certification of finished chain cables

4.1 Proof and breaking load tests

4.1.1 Finished chain cables are to be subjected to the proof load test and the breaking load test in the presence of the Surveyor, and shall not fracture or exhibit cracking. Special attention is to be given to the visual inspection of the flash-butt weld, if present. For this purpose, the chain cables must be free from paint and anti-corrosion media.

4.1.2 Each chain cable length (27.5 m) is to be subjected to a loading test at the proof load appropriate to the particular chain cable as given by Table 5 and using an approved testing machine.

W18 (cont)

Table 5 Formulas for proof load and breaking load tests

Test	Grade 1	Grade 2	Grade 3
Proof load (kN)	$0.00686d^2(44-0.08d)$	$0.00981d^2(44-0.08d)$	$0.01373d^2(44-0.08d)$
Breaking load (kN)	$0.00981d^2(44-0.08d)$	$0.01373d^2(44-0.08d)$	$0.01961d^2(44-0.08d)$

***Note*: d = nominal diameter, in mm.**

4.1.3 For the breaking load test, one sample comprising at least of three links is to be taken from every four lengths or fraction of chain cables and tested at the breaking loads given by Table 5. The breaking load is to be maintained for a minimum of 30 seconds. The links concerned shall be made in a single manufacturing cycle together with the chain cable and must be welded and heat treated together with it. Only after this may they be separated from the chain cable in the presence of the Surveyor.

4.1.4 If the tensile loading capacity of the testing machine is insufficient to apply the breaking load for chain cables of large diameter, another equivalent testing method shall be agreed with the Society.

4.2 Retests

4.2.1 Should a breaking load test fail, a further test specimen may be taken from the same length of chain cable and tested. The test shall be considered successful if the requirements are then satisfied.

If the retest fails, the length of chain cable concerned shall be rejected. If the manufacturer so wishes, the remaining three lengths belonging to the unit test quality may then be individually subjected to test at the breaking load. If one such test fails to meet the requirements, the entire unit test quantity is rejected.

4.2.2 Should a proof load test fail, the defective link(s) is (are) to be replaced, a local heat treatment to be carried out on the new link(s) and the proof load test is to be repeated. In addition, an investigation is to be made to identify the cause of the failure.

4.3 Mechanical tests on grade 2 and 3 chain cable

4.3.1 For Grade 2 and 3 chain cables, mechanical test specimens required in Table 6 are to be taken from every four lengths in accordance with 4.3.2. For forged or cast chain cables where the batch size is less than four lengths, the sampling frequency will be by heat and heat treatment charge. Mechanical tests are to be carried out in the presence of the Surveyor. For the location of the test specimens see 2.3.3.3 and Figure 1. Testing is to follow 2.3.3.4 and 2.3.3.5. Retesting is to follow 2.3.3.6 and 2.3.3.7.

4.3.2 An additional link (or where the links are small, several links) for mechanical test specimen removal is (are) to be provided in a length of chain cable not containing the specimen for the breaking test. The specimen link must be manufactured and heat treated together with the length of chain cable.

W18 (cont)

Table 6 Number of mechanical test specimens for finished chain cables and accessories

Grade	Manufacturing method	Condition of supply[1)]	Number of test specimens		
			Tensile test for base metal	Charpy V-notch impact test	
				Base metal	Weldment
1	Flush-butt welded	AW N	NR	NR	NR
2	Flush-butt welded	AW	1	3	3
		N	NR	NR	NR
	Forged or Cast	N	1	3[2)]	NA
3	Flush-butt welded	N NT QT	1	3	3
	Forged or Cast	N NT QT	1	3	NA

1) AW = As welded, N = Normalized, NT = Normalized and tempered, QT = Quenched and tempered
2) For chain cables, Charpy V-notch impact test is not required.
NR = Not required
NA = Not applicable

4.3.3 The mechanical properties must be in accordance with the values indicated in Table 7.

Table 7 Mechanical properties of finished chain cables and accessories

Grade	R_{eH} N/mm^2 min.	R_m N/mm^2	A_5 % min.	Z % min.	Charpy V-notch impact test		
					Test temperature, in °C	Absorbed energy, in Joules min.	
						Base metal	Weldment
1	NR	NR	NR	NR	NR	NR	NR
2	295	490-690	22	NR	0	27	27
3	410	690 min.	17	40	0[1)]	60	50
					-20	35	27

[1)] Testing is normally to be carried out at 0°C.

NR = Not required.

4.4 Marking

Chain cables which meet the requirements are to be stamped at both ends of each length at least with the following marks; cf. Figure 3.

- Chain cable grade
- Certificate number
- Society's stamp

W18
(cont)

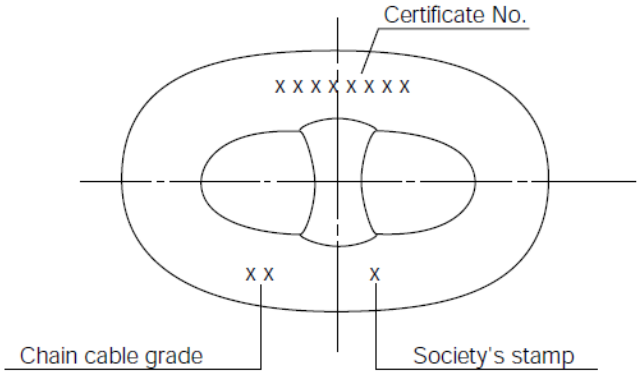

Figure 3 Marking of chain cables

4.5 Certification

Chain cables which meet the requirements are to be certified by the Society at least with the following items:

- Manufacturer's name
- Grade
- Chemical composition (including total aluminum content)
- Nominal diameter/weight
- Proof/break loads
- Heat treatment
- Marks applied to chain
- Length
- Mechanical properties, where applicable

W18.5 Testing and certification of accessories

5.1 Proof load test

All accessories are to be subjected to the proof load test at the proof load specified for the corresponding chain given by Table 5, and in accordance with the provisions of 4.1, as appropriate.

5.2 Breaking load test

5.2.1 From each manufacturing batch (same accessory type, grade, size and heat treatment charge, but not necessarily representative of each heat of steel or individual purchase order) of 25 units or less of detachable links, shackles, swivels, swivel shackles, enlarged links, and end links, and from each manufacturing batch of 50 units or less of kenter shackles, one unit is to be subjected to the breaking load test at the break load specified for the corresponding chain given by Table 5 and in accordance with the provisions of 4.1, as appropriate. Parts tested in this way may not be put to further use. Enlarged links and end links need not be tested provided that they are manufactured and heat treated together with the chain cable.

5.2.2 The Society may waive the breaking load test if:

a) the breaking load has been demonstrated on the occasion of the approval testing of parts of the same design, and
b) the mechanical properties of each manufacturing batch are proved, and

W18 (cont)

c) the parts are subjected to suitable non-destructive testing.

5.2.3 Notwithstanding the above, the accessories, which have been successfully tested at the prescribed breaking load appropriate to the chain, may be used in service at the discretion of the Society where the accessories are manufactured with the following:

a) the material having higher strength characteristics than those specified for the part in question (e.g. Grade 3 material for accessories for Grade 2 chain),
b) or alternatively, the same grade material as the chain but with increased dimensions subject to the successful procedure tests that such accessories are so designed that the breaking strength is not less than 1.4 times the prescribed breaking load of the chain for which they are intended.

5.3 Mechanical properties and tests

Unless otherwise specified, the forging or casting must at least comply with the mechanical properties given in Table 7, when properly heat treated. For test sampling, forgings or castings of similar dimensions originating from the same heat treatment charge and the same heat of steel are to be combined into one test unit. Mechanical tests are to be carried out in the presence of the Surveyor depending on the type and grade of material used. From each test unit, one tensile test specimen and three Charpy V-notch impact test specimens are to be taken in accordance with Table 6 and tested in accordance with UR W2. For the location of the test specimens see 2.3.3.3 and Figure 1. Testing is to follow 2.3.3.4 and 2.3.3.5. Retesting is to follow 2.3.3.6 and 2.3.3.7. Enlarged links and end links need not be tested provided that they are manufactured and heat treated together with the chain cable.

5.4 Marking

Accessories which meet the requirements are to be stamped as follows:

- Chain cable grade
- Certificate number
- Society's stamp

5.5 Certification

Chain accessories which meet the requirements are to be certified by the Society at least with the following items:

- Manufacturer’s name
- Grade
- Heat Number
- Chemical composition (including total aluminum content)
- Nominal diameter/weight
- Proof/break loads
- Heat treatment
- Marks applied to accessory
- Mechanical properties, where applicable

W18 (cont)

Appendix A
Chafing Chain for Emergency Towing Arrangements

1. Scope

These requirements apply to the chafing chain for chafing gear of two types of Emergency Towing Arrangement (ETA) with specified safe working load (SWL) of 1000kN (ETA1000) and 2000kN (ETA2000). Chafing chains other than those specified can be used subject to special agreement with the Classification Society.

2. Approval of manufacturing

The chafing chain is to be manufactured by works approved by the Society according to W18.1.3.

3. Materials

The materials used for the manufacture of the chafing chain are to satisfy the requirements of W 18.2.

4. Design, manufacture, testing and certification of chafing chain

4.1 The chafing chain is to be designed, manufactured, tested and certified in accordance with the requirements of W18.3, W18.4 and W18.5.

4.2 The arrangement at the end connected to the strongpoint and the dimensions of the chafing chain are determined by the type of ETA. The other end of the chafing chain is to be fitted with a pear-shaped open link allowing connection to a shackle corresponding to the type of ETA and chain cable grade. A typical arrangement of this chain end is shown in Figure 1.

4.3 The common link is to be of stud link type grade 2 or 3.

4.4 The chafing chain is to be able to withstand a breaking load not less than twice the SWL. For each type of ETA, the nominal diameter of common link for chafing chains is to comply with the value indicated in Table 1.

Table 1: Nominal diameter of common link for chafing chains

Type of ETA	**Nominal diameter of common link, d min.**	
	Grade 2	**Grade 3**
ETA1000	**62mm**	**52mm**
ETA2000	**90mm**	**76mm**

W18
(cont)

Figure 1: Typical outboard chafing chain end

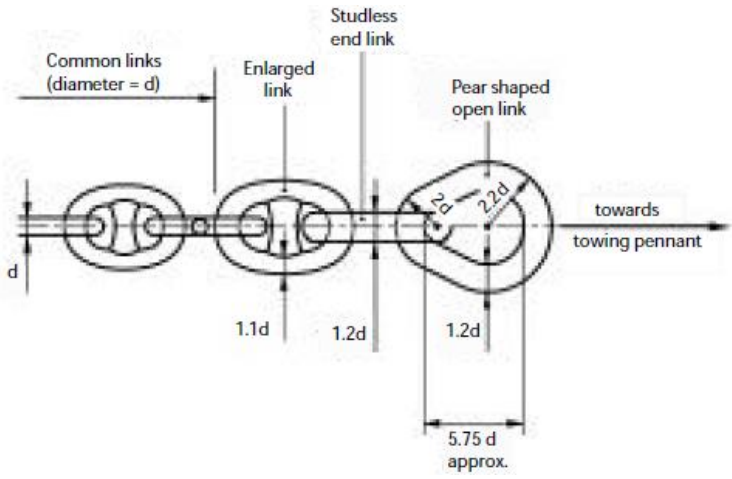

End of Document

W19 Deleted

W20 Deleted

W21 Deleted

◀◀

W22 Offshore Mooring Chain

(1993) (Rev.1 1997) (Rev.2 July 1999) (Rev.3 May 2004) (Rev.4 Sept 2006) (Rev.5 Dec 2009) (Corr.1 June 2011) (Rev.6 June 2016)

1 GENERAL REQUIREMENTS

1.1 Scope

1.1.1 These requirements apply to the materials, design, manufacture and testing of offshore mooring chain and accessories intended to be used for applications such as: mooring of mobile offshore units, mooring of floating production units, mooring of offshore loading systems and mooring of gravity based structures during fabrication.

1.1.2 Mooring equipment covered are common stud and studless links, connecting common links (splice links), enlarged links, end links, detachable connecting links (shackles), end shackles, subsea connectors, swivels and swivel shackles.

1.1.3 Studless link chain is normally deployed only once, being intended for long-term permanent mooring systems with pre-determined design life.

1.1.4 Requirements for chafing chain for single point mooring arrangements are given in Appendix A.

1.2 Chain grades

1.2.1 Depending on the nominal tensile strength of the steels used for manufacture, chains are to be subdivided into five grades, i.e.: R3, R3S, R4, R4S and R5.

1.2.2 Manufacturers propriety specifications for R4S and R5 may vary subject to design conditions and the acceptance of the Classification Society.

1.2.3 Each Grade is to be individually approved. Approval for a higher grade does not constitute approval of a lower grade. If it is demonstrated to the satisfaction of the Classification Society that the higher and lower grades are produced to the same manufacturing procedure using the same chemistry and heat treatment, consideration will be given to qualification of a lower grade by a higher. The parameters applied during qualification are not to be modified during production.

Note:

1. This UR is to be uniformly implemented by IACS Societies on offshore units and single point moorings contracted for construction on or after 1 July 2011 and when the application for certification of mooring chains and accessories is dated on or after 1 July 2011.

2. Rev.6 of this UR is to be uniformly implemented by IACS Societies on offshore units and single point moorings contracted for construction on or after 1 July 2017 and when the application for certification of mooring chains and accessories is dated on or after 1 July 2017.

3. The “contracted for construction” date means the date on which the contract to build the vessel is signed between the prospective owner and the shipbuilder. For further details regarding the date of “contract for construction”, refer to IACS Procedural Requirement (PR) No. 29.

W22
(cont)

1.3 Approval of chain manufacturers

1.3.1 Offshore mooring chains are to be manufactured only by works approved by the Classification Society. For this purpose approval tests are to be carried out, the scope of which is to include proof and breaking load tests, measurements and mechanical tests including fracture mechanics tests.

1.3.2 Manufacturers are to submit for review and approval the sequence of operations from receiving inspection to shipment and details of the following manufacturing processes:

a) Bar heating and bending including method, temperatures, temperature control and recording,
b) Flash welding including current, force, time and dimensional variables as well as control and recording of parameters, maintenance procedure and programme for welding machine,
c) Flash removal including method and inspection,
d) Stud insertion method, for stud link chain,
e) Heat treatment including furnace types, means of specifying, controlling and recording of temperature and chain speed and allowable limits, quenching bath and agitation, cooling method after exit,
f) Proof and break loading including method/machine, means of horizontal support (if applicable), method of measurement and recording,
g) Non-destructive examination procedures,
h) The manufacturer's surface quality requirement of mooring components is to be submitted.
i) The manufacturer's procedure for removing and replacing defective links without heat treatment of the entire chain.

1.3.3 For initial approval CTOD tests are to be carried out on the particular IACS mooring grade of material. CTOD tests are to be tested in accordance with a recognized standard such as BS 7448 Part 1 & BS EN ISO 15653:2010. The CTOD test piece is to be a standard 2 x 1 single edge notched bend piece, test location as shown in Figure 1. The notch of the CTOD specimen is to be located as close to the surface as practicable. The minimum cross section of the test piece shall be 50 x 25mm for chain diameters less than 120mm, and 80 x 40mm for diameters 120mm and above. CTOD specimens are to be taken from both the side of the link containing the weld and from the opposite side. Three links are to be selected for testing, a total of six CTOD specimens. The tests are to be taken at minus 20º C and the lowest CTOD of each set of 3 specimens shall meet the minimum values indicated below in table 1:

Table 1 Minimum CTOD test values for chain type

Chain Type	*R3 in mm*		*R3S in mm*		*R4 in mm*		*R4S & R5 in mm*	
	BM	*WM*	*BM*	*WM*	*BM*	*WM*	*BM*	*WM*
Stud link	0.20	0.10	0.22	0.11	0.24	0.12	0.26	0.13
Studless	0.20	0.14	0.22	0.15	0.24	0.16	0.26	0.17

1.3.4 Calibration of furnaces shall be verified by measurement and recording of a calibration test piece with dimensions equivalent to the maximum size of link manufactured. The manufacturer shall submit a procedure for furnace temperature surveys which shall include the following requirements: The temperature uniformity of furnaces is to be surveyed whenever approval of manufacturer is requested and at least annually during normal operating conditions. Furnaces are to be checked by conveying a monitoring link instrumented with two thermocouples through the furnaces at representative travel speed.

W22 (cont)

One thermocouple shall be attached to the surface of the straight part and one thermocouple shall be imbedded in a drilled hole located at the mid thickness position of the straight part of the calibration block. The time-temperature curves shall show that the temperatures throughout the cross section and the soaking times are within specified limits as given in the heat treatment procedure.

1.3.5 For R4S and R5 chain and accessories, prior to approval, the manufacturer is to have undertaken experimental tests or have relevant supporting data to develop the chain and accessory material. The tests and data may include: fatigue tests, hot ductility tests (no internal flaws are to develop whilst bending in the link forming temperature range), welding parameter research, heat treatment study, strain age resistance, temper embrittlement study, stress corrosion cracking (SCC) data and hydrogen embrittlement (HE) study, using slow strain test pieces in hydrated environments. Reports indicating the results of experimental tests are to be submitted.

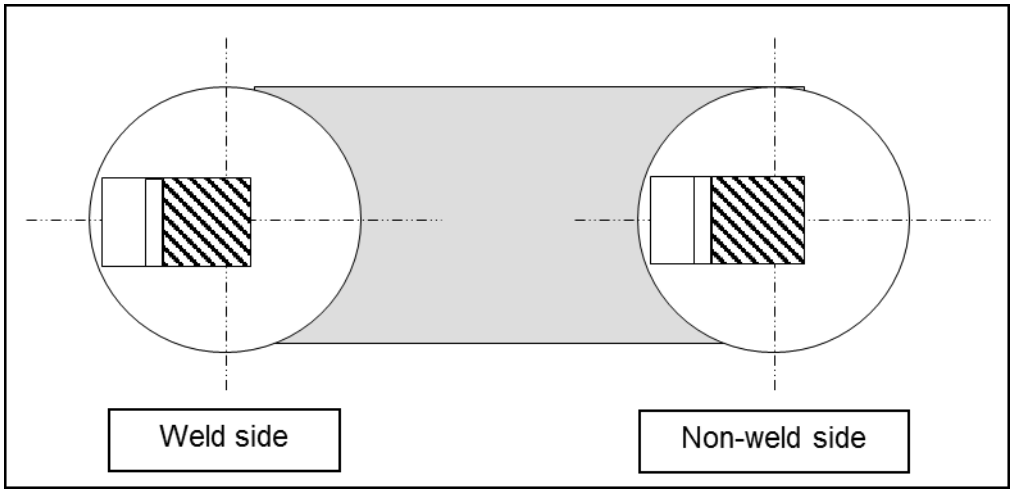

Figure 1 Location of CTOD test specimens for chain

1.4 Approval of quality system at chain and accessory manufacturers

1.4.1 Chain and accessory manufacturers are to have a documented and effective quality system approved by the Classification Society. The provision of such a quality system is required in addition to, and not in lieu of, the witnessing of tests by a Surveyor as specified in Sections 2 to 5 of this Unified Requirement.

1.5 Approval of steel mills; Rolled Bar

1.5.1 Bar materials intended for chain and accessories are to be manufactured only by works approved by the Classification Society. The approval is limited to a nominated supplier of bar material. If a chain manufacturer wishes to use material from a number of suppliers, separate approval tests must be carried out for each supplier.

1.5.2 Approval will be given only after successful testing of the completed chain. Each Grade is to be individually approved. Approval for a higher grade does not constitute approval of a lower grade. If it is demonstrated to the satisfaction of the Classification Society that the higher and lower grades are produced to the same manufacturing procedure using the same

W22
(cont)

chemistry and heat treatment, consideration will be given to qualification of a lower grade by a higher. The parameters applied during qualification are not to be modified during production. The approval will normally be limited up to the maximum diameter equal to that of the chain diameter tested. The rolling reduction ratio is to be recorded and is to be at least 5:1 for R3, R3S, R4, R4S and R5. The rolling reduction ratio used in production can be higher, but should not be lower than that qualified.

1.5.3 The steelmaker is to submit a specification of the chemical composition of the bar material, which must be approved by the Classification Society and by the chain manufacturer. The steel maker is to confirm by analysis and testing that the specification is met. For Grade R4, R4S and R5 chain the steel shall contain a minimum of 0.20 per cent molybdenum.

1.5.4 A heat treatment sensitivity study simulating chain production conditions shall be applied in order to verify mechanical properties and establish limits for temperature and time combinations. All test details and results are to be submitted to the Classification Society.

1.5.5 The bar manufacturer is to provide evidence that the manufacturing process produces material that is resistant to strain ageing, temper embrittlement and for R3S, R4, R4S and R5, hydrogen embrittlement. All test details and results are to be submitted to the Classification Society.

1.6 Approval of forges and foundries; Accessories

1.6.1 Forges and foundries intending to supply finished or semi-finished accessories are to be approved by the Classification Society. A description of manufacturing processes and process controls is to be submitted to the Classification Society. The scope of approval is to be agreed with the Classification Society. The approval is to be limited to a nominated supplier of forged or cast material. If an accessory manufacturer wishes to use material from a number of suppliers, a separate approval must be carried out for each supplier.

1.6.2 Approval will be given only after successful testing of the completed accessory. Approval for a higher grade does not constitute approval of a lower grade. If it is demonstrated to the satisfaction of the Classification Society that the higher and lower grades are produced to the same manufacturing procedure using the same steel specification, supplier and heat treatment, consideration will be given to qualification of a lower grade by a higher. The approval will normally be limited to the type of accessory and the IACS designated mooring grade of material up to the maximum diameter or thickness equal to that of the completed accessory used for qualification unless otherwise agreed by the Classification Society. However for the different accessories that have the same geometry, the tests for initial approval are to be carried out on the one having the lowest reduction ratio. Qualification of accessory pins to maximum diameters is also required. Individual accessories of complex geometries will be subject to the Classification Society requirements.

1.6.3 For forgings – Forgings are to have wrought microstructure and the minimum reduction ratio is to be 3 to 1. The forging reduction ratio, used in the qualification tests, from cast ingot/slab to forged component is to be recorded. The forging reduction ratio used in production can be higher, but should not be lower than that qualified. The degree of upsetting during qualification is to be recorded and maintained during production. Heat cycling during forging and reheating is to be monitored by the manufacturer and recorded in the forging documentation. The manufacturer is to have a maintenance procedure and schedule for dies and tooling which shall be submitted to the Classification Society.

W22 (cont)

1.6.4 The forge or foundry is to submit a specification of the chemical composition of the forged or cast material, which must be approved by the Classification Society. For Grade R4, R4S and R5 chain the steel should contain a minimum of 0.20 per cent molybdenum.

1.6.5 Forges and foundries are to provide evidence that the manufacturing process produces material that is resistant to strain ageing, temper embrittlement and for R4S and R5 grades, hydrogen embrittlement. A heat treatment sensitivity study simulating accessory production conditions shall be applied in order to verify mechanical properties and establish limits for temperature and time combinations. (Cooling after tempering shall be appropriate to avoid temper embrittlement). All test details and results are to be submitted to the Classification Society.

1.6.6 For initial approval CTOD tests are to be carried out on the particular IACS mooring grade of material. Three CTOD tests are to be tested in accordance with a recognized standard such as BS 7448 Part 1 & BS EN ISO 15653:2010. For rectangular accessories, the CTOD test piece is to be a standard 2 x 1 single edge notched bend specimen of thickness equal to full thickness of material to be tested. Subsized specimens can be used subject to approval of the Classification Society. For circular geometries, the minimum cross section of the test piece shall be 50 x 25mm for accessory diameters less than 120mm, and 80 x 40mm for diameters 120mm and above. The notch of the CTOD specimen is to be located as close to the surface as practicable. The tests are to be taken at minus 20º C and the results submitted for review. The minimum values of each set of three specimens are to at least meet the requirements as indicated in table 2 (same as that of the studless chain material shown in table 1).

Table 2 Minimum CTOD test values for accessories

Grade of Accessory	*R3 in mm*	*R3S in mm*	*R4 in mm*	*R4S & R5 in mm*
CTOD	0.20	0.22	0.24	0.26

The geometry of accessories can vary. Figure 2 shows the CTOD location for circular and rectangular cross sections such as those of the D-shackle and accessories fabricated from rectangular sections. The orientation of the specimen shall consider the direction of the grain flow. Figure 2(b) shows two possible sampling positions for CTOD test specimens with notch orientation for rectangular type accessories.

W22
(cont)

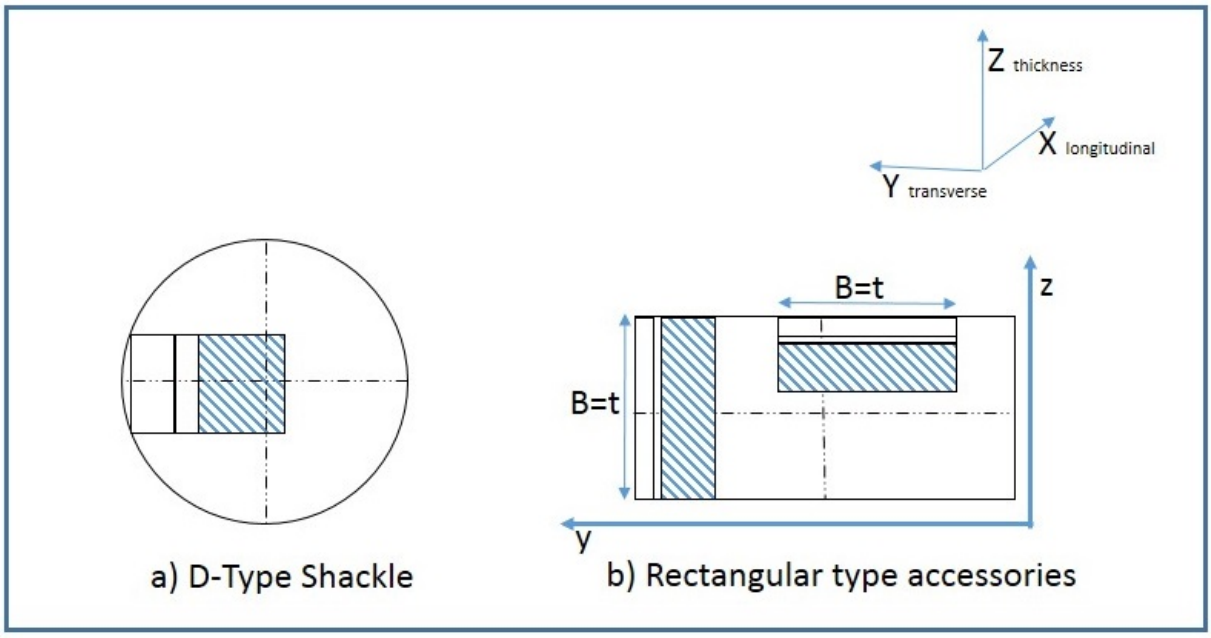

Figure 2 Location of CTOD test specimens: a) Circular type accessory and b) rectangular type accessory, B corresponds to the thickness of material, the grain flow is considered in the longitudinal direction X

1.6.7 Calibration of furnaces shall be verified by measurement and recording of a calibration test piece with dimensions equivalent to the maximum size of link manufactured. Thermocouples are to be placed both on the surface and in a drilled hole located to the mid thickness position of the calibration block. The furnace dimensions shall be such as to allow the whole furnace charge to be uniformly heated to the necessary temperature. Temperature uniformity surveys of heat treatment furnaces for forged and cast components shall be carried out according to API Spec 6A/ISO 10423 Annex M or ASTM A991. The initial survey shall be carried out with maximum charge (load) in the furnace. Subsequent surveys shall be carried out annually and may be carried out with no furnace charge.

The quench bath maximum temperature and the maximum heat treatment transfer times from furnace to quench are to be established and documented. During production the established quenching parameters are to be followed and records are to be maintained of bath temperatures and transfer times.

1.6.8 For R4S and R5 refer to additional requirements in 1.3.5.

1.7 Approval of quality system at accessory manufacturers

1.7.1 Refer to 1.4.

W22
(cont)

2 MATERIALS

2.1 Scope

2.1.1 These requirements apply to rolled steels, forgings and castings used for the manufacture of offshore mooring chain and accessories.

2.2 Rolled steel bars

2.2.1 Steel manufacture

2.2.1.1 The steels are to be manufactured by basic oxygen, electric furnace or such other process as may be specially approved. All steels are to be killed and fine grain treated. The austenitic grain size for R3, R3S and R4 is to be 6 or finer in accordance with ASTM E112 or equivalent grain size index in accordance to ISO 643. Measurements for circular sections are to be taken at 1/3 radius.

2.2.1.2 Steel for bars intended for R4S and R5 chain is to be vacuum degassed. The austenitic grain size is to be 6 or finer in accordance with ASTM E112 or equivalent grain size index in accordance to ISO 643. Measurements for circular sections are to be taken at 1/3 radius.

2.2.1.3 For R4S and R5 the following information is to be supplied by the bar manufacturer to the mooring chain manufacturer and the results included in the chain documentation:

a) Each heat is to be examined for non-metallic inclusions. The level of micro inclusions is to be quantified and assessed in accordance to the national/international standards; to be sure inclusion levels are acceptable for the final product.
b) A sample from each heat is to be macro etched according to ASTM E381 or equivalent, to be sure there is no injurious segregation or porosity.
c) Hardenability data, according to ASTM A255, or equivalent, is to be supplied with each heat.

2.2.2 Chemical composition

2.2.2.1 For acceptance tests, the chemical composition of ladle samples of each heat is to be determined by the steel maker and is to comply with the approved specification.

2.2.3 Mechanical tests

2.2.3.1 Bars of the same nominal diameter are to be presented for test in batches of 50 tonnes or fraction thereof from the same heat. Test specimens are to be taken from material heat treated in the same manner as intended for the finished chain.

2.2.3.2 Each heat of Grade R3S, R4, R4S and R5 is to be tested for hydrogen embrittlement. In case of continuous casting, test samples representing both the beginning and the end of the charge shall be taken. In case of ingot casting, test samples representing two different ingots shall be taken.

2.2.3.2.1 Two (2) tensile test specimens shall be taken from the central region of bar material which has been subjected to the heat treatment cycle intended to be used in production. A specimen with a diameter of 20 mm is preferred (consideration will be given to a diameter of 14 mm).

W22 (cont)

2.2.3.2.2 One of the specimens is to be tested within a maximum of 3 hours after machining (for a 14 mm diameter specimen, the time limit is 1½ hours). Where this is not possible, the specimen is to be immediately cooled to -60°C after machining and kept at that temperature for a maximum period of 5 days.

2.2.3.2.3 The second specimen is to be tested after baking at 250°C for 4 hours, alternatively 2 hours for 14 mm diameter specimen.

2.2.3.2.4 A slow strain rate < 0,0003 s^{-1} must be used during the entire test, until fracture occurs (This is approximately 10 minutes for the 20 mm diameter specimen). Tensile strength, elongation and reduction of area are to be reported.

2.2.3.2.5 The acceptance requirement for the test is:

$$Z_1/Z_2 \geq 0.85$$

where:

Z_1 = Reduction of area without baking
Z_2 = Reduction of area after baking

If the requirement $Z_1/Z_2 \geq 0.85$ is not achieved, the bar material may be subjected to a hydrogen degassing treatment after agreement with the Classification Society. New tests shall be performed after degassing.

2.2.3.3 For all grades, one tensile and three Charpy V-notch specimens are to be taken from each sample selected. The test specimens are to be taken at approx. one-third radius below the surface, as shown in Figure 3 and prepared in accordance with UR W2. The results of all tests are to be in accordance with the appropriate requirements of Table 3.

2.2.3.4 Re-test requirements for tensile and Charpy impact tests are detailed in UR W2.

2.2.3.5 Failure to meet the requirements will result in rejection of the batch represented unless it can be clearly attributable to improper simulated heat treatment.

Table 3 Mechanical properties of offshore mooring chain and accessories

Grade	Yield stress N/mm² minimum (1)	Tensile strength N/mm² minimum (1)	Elongation % minimum	Reduction (3) of area % minimum	Charpy V-notch impact tests		
					Test temperature °C (2)	Average energy J minimum	Avg. energy flash weld J minimum
R3	410	690	17	50	0 -20	60 40	50 30
R3S	490	770	15	50	0 -20	65 45	53 33
R4	580	860	12	50	-20	50	36
R4S(4)	700	960	12	50	-20	56	40
R5(4)	760	1000	12	50	-20	58	42

W22 (cont)

NOTES
1. Aim value of yield to tensile ratio: 0.92 max.
2. At the option of the Classification Society the impact test of Grade R3 and R3S may be carried out at either 0°C or minus 20°C (See Table 3).
3. Reduction of area of cast steel is to be for Grades R3 and R3S: min. 40 %, for R4, R4S and R5: min. 35 %, cf. item 2.4.4.
4. Aim maximum hardness for R4S is HB330 and R5 HB340.

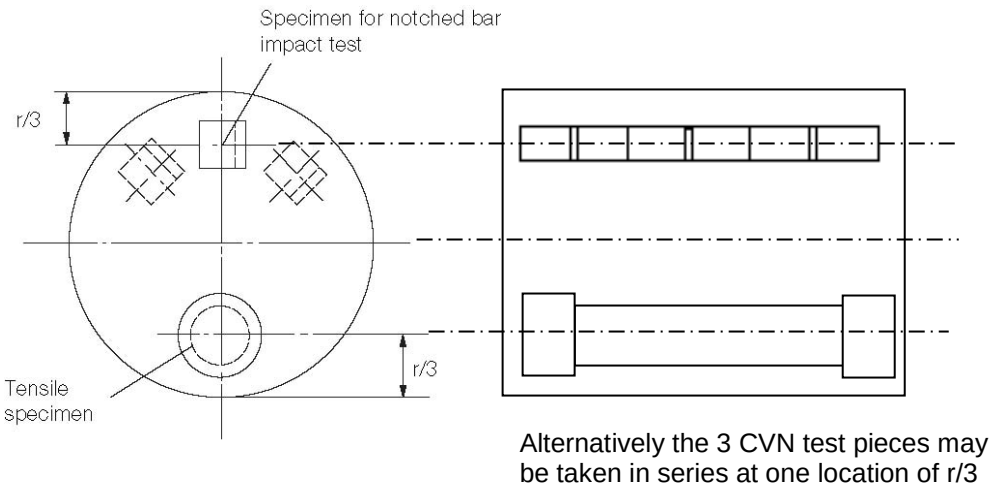

Figure 3 Sampling of steel bars, forgings and castings

2.2.4 Dimensional tolerances

2.2.4.1 The diameter and roundness shall be within the tolerances specified in Table 4, unless otherwise agreed.

Table 4 Dimensional tolerance of bar stock

Nominal diameter mm	Tolerance on diameter mm	Tolerance on roundness (d_{max} - d_{min}) mm
less than 25	-0 + 1.0	0.6
25 - 35	-0 + 1.2	0.8
36 - 50	-0 + 1.6	1.1
51 - 80	-0 + 2.0	1.5
81 - 100	-0 + 2.6	1.95
101 - 120	-0 + 3.0	2.25
121 - 160	-0 + 4.0	3.00
161 - 222	-0 + 5.0	4.00

W22
(cont)

2.2.5 Non-destructive examination and repair

2.2.5.1 Non-destructive examination is to be performed in accordance with recognized Standards such as those indicated below or equivalent. Non-destructive examination procedures, together with rejection/acceptance criteria are to be submitted to the Classification Society.

Magnetic particle testing (MT) of bars:
- ASTM E1444 and ISO 9934

Magnetic Leakage Flux Testing (MLFT)-JIS Z2319

Eddy current testing (ET) of bars:
- ISO 15549

2.2.5.2 Manufacturers shall prepare written procedures for NDE. NDE personnel shall be qualified and certified according to ISO 9712, ACCP or equivalent. Personnel qualification to an employer or responsible agency based qualification scheme as SNT-TC-1A may be accepted if the employer's written practice is reviewed and found acceptable and the Level III is ASNT Level III, ISO 9712 Level III or ACCP Professional Level III and certified in the applicable method. NDE operators shall be qualified to at least level II.

2.2.5.3 The manufacturer shall ensure that 100 percent of bar material intended for either chain or fittings is subjected to ultrasonic examination at an appropriate stage of the manufacture to procedures approved by the Classification Society and to the acceptance criteria required. The bars shall be free of pipe, cracks and flakes. If the end length of the delivered bars is not subjected to UT then it must be agreed between the bar supplier and the chain manufacturer of what length of bar is to be removed from the ends. The details are to be documented in the approval of each bar supplier. Phased array UT procedures may be applied, subject to approval by the Classification Society.

2.2.5.4 100 percent of the bar material is to be examined by magnetic particle (MT) or eddy current (ET) or Magnetic Leakage Flux Testing (MLFT) methods. The bars shall be free of injurious surface imperfections such as seams, laps and rolled-in mill scale. Provided that their depth is not greater than 1% of the bar diameter, longitudinal discontinuities may be removed by grinding and blending to a smooth contour.

All bars supplied in a machined (peeled) condition shall be 100% visually inspected. The Classification Society may also require: 10% inspected with magnetic particle testing (MT) or eddy current testing (ET) or Magnetic Leakage Flux Testing (MLFT), for longitudinal imperfections. The maximum depth of peeling is to be agreed and documented in the approval of each supplier.

2.2.5.5 The frequency of NDE may be reduced at the discretion of the Classification Society provided it is verified by statistical means that the required quality is consistently achieved.

2.2.5.6 Weld repair of bar is not permitted.

2.2.6 Marking

2.2.6.1 Each bar is to be stamped with the steel grade designation and the charge number (or a code indicating the charge number) on one of the end surfaces. Other marking methods may be accepted subject to agreement.

W22
(cont)

2.3 Forged steel

2.3.1 Manufacture

2.3.1.1 Forged steels used for the manufacture of accessories must be in compliance with approved specifications and the submitted test reports approved by the Classification Society. Steel is to be manufactured by basic oxygen, electric furnace or such other process as may be specially approved. All steel is to be killed and fine grain treated. The austenitic grain size for R3, R3S and R4 is to be 6 or finer in accordance with ASTM E112 or equivalent grain size index in accordance to ISO 643. Measurements for circular sections are to be taken at 1/3 radius. Measurements for non-circular sections are to be taken at 1/4t.

2.3.1.2 Steel for forgings intended for R4S and R5 chain is to be vacuum degassed. The austenitic grain size is to be 6 or finer in accordance with ASTM E112 or equivalent grain size index in accordance to ISO 643. Measurements for circular sections are to be taken at 1/3 radius. Measurements for non-circular sections are to be taken at 1/4t.

2.3.1.3 For steel intended for R4S and R5 accessories the following information is to be supplied by the steel manufacturer to the mooring accessory manufacturer and the results included in the accessory documentation:

a) Each heat is to be examined for non-metallic inclusions. The level of micro inclusions is to be quantified and assessed in accordance with the national/international standards; to be sure inclusion levels are acceptable for the final product.
b) A sample from each heat is to be macro-etched according to ASTM E381 or equivalent, to be sure there is no injurious segregation or porosity.
c) Hardenability data, according to ASTM A255, or equivalent, is to be supplied with each heat.

2.3.2 Chemical composition (See 2.2.2)

2.3.3 Heat treatment

2.3.3.1 Finished forgings are to be properly heat treated in compliance with specifications submitted and approved.

2.3.4 Mechanical properties

2.3.4.1 The forgings must comply with the mechanical properties given in Table 3, when properly heat treated.

2.3.5 Mechanical tests

2.3.5.1 For test sampling, forgings of similar dimensions (diameters do not differ by more than 25mm) originating from the same heat treatment charge and the same heat of steel are to be combined into one test unit. From each test unit one tensile and three impact test specimens are to be taken and tested in accordance with UR W2. For the location of the test specimens see Figure 3.

2.3.5.2 Each heat of Grade R3S, R4, R4S and R5 is to be tested for hydrogen embrittlement. In case of continuous casting, test samples representing both the beginning and the end of the charge shall be taken. In case of ingot casting, test samples representing two different ingots shall be taken.

W22 (cont)

2.3.5.2.1 Two (2) tensile test specimens shall be taken from the central region of forged material which has been subjected to the heat treatment cycle intended to be used in production. A specimen with a diameter of 20 mm is preferred (consideration will be given to a diameter of 14 mm).

2.3.5.2.2 One of the specimens is to be tested within a maximum of 3 hours after machining (for a 14 mm diameter specimen, the time limit is 1½ hours). Where this is not possible, the specimen is to be immediately cooled to -60°C after machining and kept at that temperature for a maximum period of 5 days.

2.3.5.2.3 The second specimen is to be tested after baking at 250°C for 4 hours, alternatively 2 hours for 14 mm diameter specimen.

2.3.5.2.4 A slow strain rate < 0,0003 s^{-1} must be used during the entire test, until fracture occurs (This is approximately 10 minutes for the 20 mm diameter specimen). Tensile strength, elongation and reduction of area are to be reported.

2.3.5.2.5 The acceptance requirement for the test is:

$$Z_1/Z_2 \geq 0.85$$

where:

Z_1 = Reduction of area without baking
Z_2 = Reduction of area after baking

If the requirement $Z_1/Z_2 \geq 0.85$ is not achieved, the bar material may be subjected to a hydrogen degassing treatment after agreement with the Classification Society. New tests shall be performed after degassing.

2.3.6 Non-destructive examination and repair

2.3.6.1 Non-destructive examination is to be performed in accordance with recognized Standards, such as those indicated below, or equivalent. The non-destructive examination procedures, together with rejection/acceptance criteria are to be submitted to the Classification Society.

Magnetic particle testing (MT) of forgings:
- EN 10228-1, ASTM A275, using wet continuous magnetization technique

Ultrasonic testing (UT) of forgings:
- EN 10228-3, ASTM A388, ISO 13588

2.3.6.2 Manufacturers shall prepare written procedures for NDE. NDE personnel shall be qualified and certified according to ISO 9712, ACCP or equivalent. Personnel qualification to an employer or responsible agency based qualification scheme as SNT-TC-1A may be accepted if the employer's written practice is reviewed and found acceptable and the Level III is ASNT Level III, ISO 9712 Level III or ACCP Professional Level III and certified in the applicable method. NDE operators shall be qualified to at least level II.

2.3.6.3 The forgings are to be subjected to one hundred percent ultrasonic examination at an appropriate stage of manufacture and in compliance with the standard submitted and approved.

W22 (cont)

2.3.6.4 Defects on non-machined surfaces may be removed by grinding to a depth of 5% of the nominal diameter. Grinding is not permitted on machined surfaces, except for slight inspection grinding on plane surfaces to a maximum depth of 0.8 mm in order to investigate spurious indications. Welding repairs are not permitted.

2.3.7 Marking

2.3.7.1 Marking is to be similar to that specified in 2.2.6.

2.4 Cast steel

2.4.1 Manufacture

2.4.1.1 Cast steel used for the manufacture of accessories must be in compliance with approved specifications and the submitted test reports approved by the Classification Society. Steel is to be manufactured by basic oxygen, electric furnace or such other process as may be specially approved. All steel is to be killed and fine grain treated. The austenitic grain size for R3, R3S and R4 is to be 6 or finer in accordance with ASTM E112 or equivalent grain size index in accordance to ISO 643. Measurements for circular sections are to be taken at 1/3 radius. Measurements for non-circular sections are to be taken at 1/4t.

2.4.1.2 Steel for castings intended for R4S and R5 accessories is to be vacuum degassed. The austenitic grain size is to be 6 or finer in accordance with ASTM E112 or equivalent grain size index in accordance to ISO 643. Measurements for circular sections are to be taken at 1/3 radius. Measurements for non-circular sections are to be taken at 1/4t.

2.4.1.3 For steel intended for R4S and R5 accessories the following information is to be obtained and the results included in the accessory documentation:

a) Each heat is to be examined for non-metallic inclusions. The level of micro inclusions is to be quantified and assessed in accordance to the national/international standards; to be sure inclusion levels are acceptable for the final product.
b) A sample from each heat is to be macro etched according to ASTM E381 or equivalent, to be sure there is no injurious segregation or porosity.
c) Hardenability data, according to ASTM A255, or equivalent, is to be supplied with each heat.

2.4.2 Chemical composition (See 2.2.2)

2.4.3 Heat treatment

2.4.3.1 All castings are to be properly heat treated in compliance with specifications submitted and approved.

2.4.4 Mechanical properties

2.4.4.1 The castings must comply with the mechanical properties given in Table 3. The acceptance requirement for reduction of area is, however, reduced to 40 percent for grades R3 and R3S and 35 percent for grades R4, R4S and R5.

2.4.5 Mechanical tests

2.4.5.1 For test sampling, castings of similar dimensions originating from the same heat treatment charge and the same heat of steel are to be combined into one test unit. From each

W22 (cont)

test unit one tensile and three impact test specimens are to be taken and tested. For the location of the test specimens see Figure 3.

2.4.6 Non-destructive examination and repair

2.4.6.1 Non-destructive examination is to be performed in accordance with recognized standards, such as those indicated below, or equivalent. The non-destructive examination procedures, together with rejection/acceptance criteria are to be submitted to the Classification Society.

Magnetic particle testing (MT) of castings:
- ASTM E709, using wet continuous magnetisation technique

Ultrasonic testing (UT) of castings:
- ASTM A609, ISO 13588

2.4.6.2 Manufacturers shall prepare written procedures for NDE. NDE personnel shall be qualified and certified according to ISO 9712, ACCP or equivalent. Personnel qualification to an employer or responsible agency based qualification scheme as SNT-TC-1A may be accepted if the employer's written practice is reviewed and found acceptable and the Level III is ASNT Level III, ISO 9712 Level III or ACCP Professional Level III and certified in the applicable method. NDE operators shall be qualified to at least level II.

2.4.6.3 The castings are to be subjected to one hundred percent ultrasonic examination in compliance with the standard submitted and approved.

2.4.6.4 Defects on non-machined surfaces may be removed by grinding to a depth of 5% of the nominal diameter. Grinding is not permitted on machined surfaces, except for slight inspection grinding on plane surfaces to a maximum depth of 0.8 mm in order to investigate spurious indications.

2.4.6.5 Where the repair entails removal of more than 5% of the diameter or thickness, the defective area shall be repaired by welding. The excavations shall be suitably shaped to allow good access for welding. The resulting grooves shall be subsequently ground smooth and complete elimination of the defective material shall be verified by NDE.

2.4.6.6 Weld repairs are classified as major or minor. A weld repair is considered major when the depth of the groove prepared for welding exceeds 25% of the diameter/thickness or 25 mm, whichever is smaller. All other weld repairs are considered minor.

2.4.6.7 Major weld repairs require approval before the repair is commenced. Proposals for major repairs shall be accompanied by sketches or photographs showing the extent and positions of the repairs. A grain refining heat treatment shall be given to the whole casting prior to major repairs. A post weld heat treatment or repeat of original heat treatment of castings shall be carried out.

2.4.6.8 Minor and major weld repairs must be recorded on sketches or photographs showing the extent and positions of the repairs.

2.4.6.9 All weld repairs shall be done by qualified welders using qualified procedures. Welders shall be qualified according to ISO 9606, ASME IX, ASTM A488 or equivalent. Procedures shall be qualified according to ISO 15614, ASME IX, ASTM A488 or equivalent with the following additional requirements: Charpy V notch impact tests with notch locations in weld metal, fusion line and heat affected zone + 2 mm and + 5 mm from fusion line, respectively. Test results shall meet the requirements specified for the parent metal.

W22
(cont)

2.4.7 Marking (See 2.3.7)

2.5 Materials for studs

2.5.1 Studs intended for stud link chain cable are to be made of steel corresponding to that of the chain or in compliance with specifications submitted and approved. In general, the carbon content should not exceed 0.25 percent if the studs are to be welded in place.

W22
(cont)

3 DESIGN AND MANUFACTURE

3.1 Design

3.1.1 Drawings accompanied by design calculations, giving detailed design of chain and accessories made by or supplied through the chain manufacturer are to be submitted for approval. Typical designs are given in ISO 1704. For studless chain the shape and proportions are to comply with the requirements of this UR. Other studless proportions are to be specially approved. It should be considered that new or non-Standard designs of chain, shackles or fittings, may require a fatigue analysis and possible performance, fatigue or corrosion fatigue testing.

3.1.2 In addition, for stud link chain, drawings showing the detailed design of the stud shall be submitted for information. The stud shall give an impression in the chain link which is sufficiently deep to secure the position of the stud, but the combined effect of shape and depth of the impression shall not cause any harmful notch effect or stress concentration in the chain link.

3.1.3 Machining of Kenter shackles shall result in fillet radius min. 3 percent of nominal diameter.

3.2 Chain cable manufacturing process

3.2.1 General

3.2.1.1 Offshore mooring chains shall be manufactured in continuous lengths by flash butt welding and are to be heat treated in a continuous furnace; batch heat treatment is not permitted, except in special circumstances where short lengths of chain are delivered, such as chafing chain. Ref. Appendix A.

3.2.1.2 The use of joining shackles to replace defective links is subject to the written approval of the end purchaser in terms of the number and type permitted. The use of connecting common links is restricted to 3 links in each 100m of chain.

3.2.2 Chain cable manufacturing process records

3.2.2.1 Records of bar heating, flash welding and heat treatment shall be made available for inspection by the Surveyor.

3.2.3 Bar heating

3.2.3.1 Bars for links shall be heated by electric resistance, induction or in a furnace.

3.2.3.2 For electric resistance heating or induction heating, the heating phase shall be controlled by an optical heat sensor. The controller shall be checked at least once every 8 hours and records made.

3.2.3.3 For furnace heating, the heat shall be controlled and the temperature continuously recorded using thermocouples in close proximity to the bars. The controls shall be checked at least once every 8 hours and records made.

3.2.4 Flash welding of chain cable

3.2.4.1 The following welding parameters shall be controlled during welding of each link:

a) Platen motion

W22 (cont)

b) Current as a function of time
c) Hydraulic pressure

3.2.4.2 The controls shall be checked at least every 4 hours and records made.

3.2.5 Heat treatment of chain cable

3.2.5.1 Chain shall be austenitized, above the upper transformation temperature, at a combination of temperature and time within the limits established.

3.2.5.2 When applicable, chain shall be tempered at a combination of temperature and time within the limits established. Cooling after tempering shall be appropriate to avoid temper embrittlement.

3.2.5.3 Temperature and time or temperature and chain speed shall be controlled and continuously recorded.

3.2.5.4 Grain determination shall be made for the final product. The austenitic grain size for R3, R3S, R4, R4S and R5 is to be 6 or finer in accordance with ASTM E112 or equivalent grain size index in accordance to ISO 643. Measurements for circular sections are to be taken at surface, 1/3 radius and centre for the base material, HAZ and weld.

3.2.6 Mechanical properties

3.2.6.1 The mechanical properties of finished chain and accessories are to be in accordance with Table 3. For the location of test specimens see Figures 3 and 4.

3.2.7 Proof and breaking test loads

3.2.7.1 Chains and accessories are to withstand the proof and break test loads given in Table 5.

3.2.8 Freedom from defects

3.2.8.1 All chains are to have a workmanlike finish consistent with the method of manufacture and be free from defects. Each link is to be examined in accordance with section 4.5 using approved procedures.

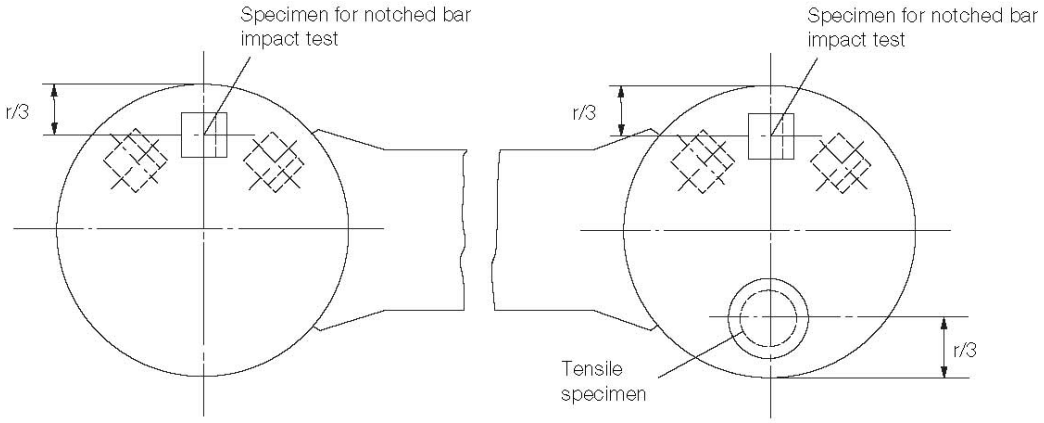

Figure 4 Sampling of chain links

W22 (cont)

Table 5 Formulas for proof and break test loads, weight and length over 5 links

Test Load, in kN	***Grade R3 Stud Link***	***Grade R3S Stud Link***	***Grade R4 Stud Link***	***Grade R4S Stud Link***	***Grade R5 Stud Link***
Proof	0.0148 d^2 (44 – 0.08d)	0.0180 d^2 (44 – 0.08d)	0.0216 d^2 (44 – 0.08d)	0.0240 d^2 (44 – 0.08d)	0.0251 d^2 (44 – 0.08d)
Break	0.0223 d^2 (44 – 0.08d)	0.0249 d^2 (44 – 0.08d)	0.0274 d^2 (44 – 0.08d)	0.0304 d^2 (44 – 0.08d)	0.0320 d^2 (44 – 0.08d)
Test Load, in kN	***Grade R3 Studless***	***Grade R3S Studless***	***Grade R4 Studless***	***Grade R4S Studless***	***Grade R5 Studless***
Proof	0.0148 d^2 (44 – 0.08d)	0.0174 d^2 (44 – 0.08d)	0.0192 d^2 (44 – 0.08d)	0.0213 d^2 (44 – 0.08d)	0.0223 d^2 (44 – 0.08d)
Break	0.0223 d^2 (44 – 0.08d)	0.0249 d^2 (44 – 0.08d)	0.0274 d^2 (44 – 0.08d)	0.0304 d^2 (44 – 0.08d)	0.0320 d^2 (44 – 0.08d)
Chain Weight, in kg/m	Stud link = 0.0219d^2				
Chain Weight, in kg/m	Studless chain Weight calculations for each design are to be submitted.				
Pitch Length	Five Link Measure				
Minimum	22d				
Maximum	22.55d				

3.2.9 Dimensions and dimensional tolerances

3.2.9.1 The shape and proportion of links and accessories must conform to ISO 1704 or the designs specially approved.

3.2.9.2 The following tolerances are applicable to links:

a) The negative tolerance on the nominal diameter measured at the crown:

up to 40 mm nominal diameter : - 1 mm
over 40 up to 84 mm nominal diameter : - 2 mm
over 84 up to 122 mm nominal diameter : - 3 mm
over 122 up to 152 mm nominal diameter : - 4 mm
over 152 up to 184 mm nominal diameter : - 6 mm
over 184 up to 222 mm nominal diameter : - 7.5 mm

Note 1:
The cross sectional area at the crown must have no negative tolerance. For diameters of 20 mm or greater, the plus tolerance may be up to 5 percent of the nominal diameter. For diameters less than 20 mm the plus tolerance is to be agreed with the Classification Society at the time of approval.

Note 2:
The cross sectional area at the crown is to be calculated using the average of the diameters with negative tolerance and plus tolerance, measurements are to be taken from at least 2 locations approximately 90 degrees apart.

b) Diameter measured at locations other than the crown:

The diameter is to have no negative tolerance. The plus tolerance may be up to 5 percent of the nominal diameter except at the butt weld where it is to be in accordance

W22 (cont)

to manufacturer's specification, which is to be agreed with the Classification Society. For diameters less than 20 mm, the plus tolerance is to be agreed with the Classification Society at the time of approval.

c) The allowable manufacturing tolerance on a length of five links is + 2.5 percent, but may not be negative.

d) All other dimensions are subject to a manufacturing tolerance of ± 2.5 percent, provided always that all parts fit together properly.

e) The tolerances for stud link and studless common links are to be measured in accordance with Figure 5.

f) For stud link chains studs must be located in the links centrally and at right angles to the sides of the link. The following tolerances in Figure 5 are acceptable provided that the stud fits snugly and its ends lie flush against the inside of the link:

(a) Stud link - The internal link radii (R) and external radii should be uniform

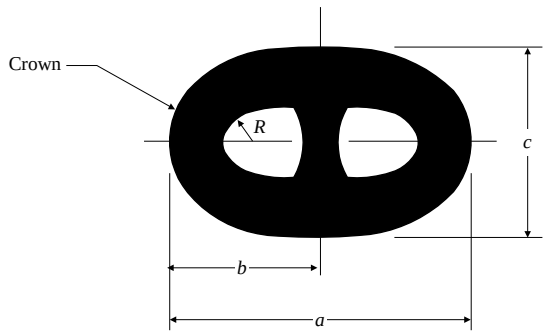

Designation (1)	*Description*	*Nominal Dimension of the Link*	*Minus Tolerance*	*Plus Tolerance*
a	Link Length	6*d*	0.15*d*	0.15*d*
b	Link Half Length	*a**/2	0.1*d*	0.1*d*
c	Link Width	3.6*d*	0.09*d*	0.09*d*
e	Stud Angular Misalignment	0 degrees	4 degrees	4 degrees
R	Inner Radius	0.65*d*	0	-----

Note 1: Dimension designation is shown in above figure
d = Nominal diameter of chain, a* = Actual link length

W22
(cont)

(b) Studless - The internal link radii (R) and external radii should be uniform.

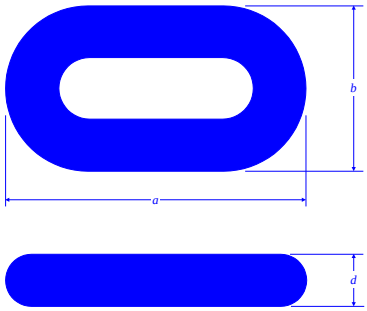

Designation (1)	*Description*	*Nominal Dimension of the Link*	*Minus Tolerance*	*Plus Tolerance*
a	Link Length	6*d*	0.15*d*	0.15*d*
b	Link Width	3.35*d*	0.09*d*	0.09*d*
R	Inner Radius	0.60*d*	0	-----

Notes: 1 Dimension designation is shown in above figure.
d = Nominal diameter of chain
2 Other dimension ratios are subject to special approval.

Figure 5 (a) Stud link and (b) studless common link, proportions dimensions and tolerances

3.2.10 Stud link chain - welding of studs

3.2.10.1 A welded stud may be accepted for grade R3 and R3S chains. Welding of studs in grades R4, R4S and R5 chain is not permitted unless specially approved.

3.2.10.2 Where studs are welded into the links this is to be completed before the chain is heat treated.

3.2.10.3 The stud ends must be a good fit inside the link and the weld is to be confined to the stud end opposite to the flash butt weld. The full periphery of the stud end is to be welded unless otherwise approved.

3.2.10.4 Welding of studs both ends is not permitted unless specially approved.

3.2.10.5 The welds are to be made by qualified welders using an approved procedure and low-hydrogen approved consumables.

3.2.10.6 The size of the fillet weld shall as a minimum be as per API Specification 2F.

3.2.10.7 The welds are to be of good quality and free from defects such as cracks, lack of fusion, gross porosity and undercuts exceeding 1 mm.

3.2.10.8 All stud welds shall be visually examined. At least 10 per cent of all stud welds within each length of chain shall be examined by dye penetrant or magnetic particles after proof testing. If cracks or lack of fusion are found, all stud welds in that length are to be examined.

W22
(cont)

3.2.11 Connecting common links (splice links)

3.2.11.1 Single links to substitute for test links or defective links without the necessity for re-heat treatment of the whole length are to be made in accordance with an approved procedure. Separate approvals are required for each grade of chain and the tests are to be made on the maximum size of chain for which approval is sought.

3.2.11.2 Manufacture and heat treatment of connecting common link is not to affect the properties of the adjoining links. The temperature reached by these links is nowhere to exceed 250°C.

3.2.11.3 Each link is to be subjected to the appropriate proof load and non-destructive examination as detailed in Table 5 and Section 4.5. A second link shall be made identical to the connecting common link; the link shall be tested and inspected per Section 4.4 and 4.5.

3.2.11.4 Each connecting common link is to be marked either; on the stud for stud link chain or, on the outer straight length on the side opposite the flash butt weld for studless chain. This marking is to be in accordance with Section 4.7 plus a unique number for the link. The adjoining links are also to be marked on the studs or straight length as above.

W22
(cont)

4 TESTING AND INSPECTION OF FINISHED CHAIN

4.1 General

4.1.1 This section applies to but is not limited to finished chain cable such as common stud and studless links, end links, enlarged end links and connecting common links (splice links).

4.1.2 All chain is to be subjected to proof load tests, sample break load tests and sample mechanical tests after final heat treatment in the presence of a Surveyor. Where the manufacturer has a procedure to record proof loads and the Surveyor is satisfied with the adequacy of the recording system, he need not witness all proof load tests. The Surveyor is to satisfy himself that the testing machines are calibrated and maintained in a satisfactory condition. Prior to inspection the chain is to be free from scale, paint or other coating and is to have a suitably prepared surface as per the applied NDE testing standard. The chain shall be sand or shot blast to meet this requirement.

4.2 Proof and break load tests

4.2.1 The entire length of chain shall withstand the proof load specified in Table 5 without fracture and shall not crack in the flash weld. The load applied shall not exceed the proof load by more than 10% when stretching the chain. Where plastic straining is used to set studs, the applied load is not to be greater than that qualified in approval tests.

4.2.2 A break-test specimen consisting of at least 3 links is to be either taken from the chain or produced at the same time and in the same manner as the chain. The test frequency is to be based on tests at sampling intervals according to Table 6 provided that every cast is represented. Each specimen shall be capable of withstanding the break load specified without fracture and shall not crack in the flash weld. It shall be considered acceptable if the specimen is loaded to the specified value and maintained at that load for 30 seconds.

4.2.3 For chain diameters over 100mm, alternative break-test proposals to the above break-test will be considered whereby a one link specimen is used. Alternatives are to be approved by the Classification Society, every heat is to be represented, the test frequency is to be in accordance with Table 6, and it is to be demonstrated and proven that the alternative test represents an equivalent load application to the three link test.

4.2.4 If the loading capacity of the testing machine is insufficient, an alternative load testing machine is to be used that does have sufficient capacity (e.g. two loading machines in parallel) provided the testing and calibration procedure are agreed with the Classification Society.

W22
(cont)

Table 6 Frequency of break and mechanical tests

Nominal chain diameter (mm)	Maximum sampling interval (m)
Min - 48	91
49 - 60	110
61 - 73	131
74 - 85	152
86 - 98	175
99 - 111	198
112 - 124	222
125 - 137	250
138 - 149	274
150 - 162	297
163 - 175	322
176 – 186	346
187 - 198	370
199 - 210	395
211 - 222	420

4.3 Dimensions and dimensional tolerances

4.3.1 After proof load testing measurements are to be taken on at least 5 per cent of the links in accordance with Section 3.2.9.

4.3.2 The entire chain is to be checked for the length, five links at a time. By the five link check the first five links shall be measured. From the next set of five links, at least two links from the previous five links set shall be included. This procedure is to be followed for the entire chain length. The measurements are to be taken preferably while the chain is loaded to 5 - 10 % of the minimum proof load. The tolerances for the 5 link measurements are indicated in Table 5, any deviations from the 5 link tolerances are to be agreed by the client and Classification Society. The links held in the end blocks may be excluded from this measurement.

4.3.3 Chain dimensions are to be recorded and the information retained on file.

4.4 Mechanical tests

4.4.1 Links of samples detached from finished, heat treated chain shall be sectioned for determination of mechanical properties. A test unit shall consist of one tensile and nine impact specimens. The tensile specimen shall be taken in the side opposite the flash weld. Three impact specimens shall be taken across the flash weld with the notch centred in the middle. Three impact specimens shall be taken across the unwelded side and three impact specimens shall be taken from the bend region.

4.4.2 The test frequency is to be based on tests at sampling intervals according to Table 6 provided that every cast is represented. Mechanical properties shall be as specified in Table 3.

W22 (cont)

4.4.3 The frequency of impact testing in the bend may be reduced at the discretion of the Classification Society provided it is verified by statistical means that the required toughness is consistently achieved.

4.4.4 Hardness tests are to be carried out on finished chain. The frequency and locations are to be agreed with the Classification Society. The recorded values are for information only and used as an additional check to verify that the heat treatment process has been stable during the chain production.

4.5 Non-destructive examination after proof load testing

4.5.1 All surfaces of every link shall be visually examined. Burrs, irregularities and rough edges shall be contour ground. Links shall be free from mill defects, surface cracks, dents and cuts, especially in the vicinity where gripped by clamping dies during flash welding. Studs shall be securely fastened. Chain is to be positioned in order to have good access to all surfaces. In order to allow optimal access to the surface area it is recommended that chain be hung in the vertical position, however access to inspect the interlink area may only be possible with the chain in the horizontal position.

4.5.2 Testing is to be performed in accordance with a recognized Standard and the procedures, together with acceptance/rejection criteria are to be submitted to the Classification Society for review. Manufacturers shall prepare written procedures for NDE. NDE personnel shall be qualified and certified according to ISO 9712, ACCP or equivalent. Personnel qualification to an employer or responsible agency based qualification scheme as SNT-TC-1A may be accepted if the employer's written practice is reviewed and found acceptable and the Level III is ASNT Level III, ISO 9712 Level III or ACCP Professional Level III and certified in the applicable method. NDE operators shall be qualified to at least level II.

4.5.3 Magnetic particles shall be employed to examine the flash welded area including the area gripped by the clamping dies. Procedures are to be submitted to the Classification Society for approval. Procedures and equipment in accordance with those approved shall be used. Frequency of examination shall be every link. Additionally, 10% of links are to be tested on all accessible surfaces. Link surfaces and the surface at the flash weld shall be free from cracks, lack of fusion and gross porosity. Testing shall be performed in accordance with ASTM E709 or another recognized standard (e.g. ISO 9934) using wet continuous fluorescent magnetization technique. Non fluorescent techniques can be accepted in special cases where the standard inspection procedures are impractical.

Links shall be free from:

- relevant linear indications exceeding 1.6 mm in transverse direction
- relevant linear indications exceeding 3.2 mm in longitudinal direction
- relevant non-linear indications exceeding 4.8 mm.

4.5.4 Ultrasonics shall be employed to examine the flash weld fusion. Procedures are to be submitted to the Classification Society for approval. Procedures and equipment in accordance with those approved shall be used. On-site calibration standards for chain configurations shall be approved. Frequency of examination shall be every link. The flash weld shall be free from defects causing ultrasonic back reflections equal to or greater than the calibration standard. The flash butt welds shall be ultrasonic tested (UT) in accordance with ASTM E587 or another recognized standard using single probe, angle-beam shear waves in the range from 45 to 70°.

Single probe technique has limitations as far as testing of the central region is concerned and the flash weld imperfections such as flat spots may have poor reflectivity. Where it is deemed

W22 (cont)

necessary, detectability of imperfections may need to be carried out by using a tandem technique, TOFD or phased array.

4.5.5 Stud welds, if used, shall be visually inspected. The toes of the fillets shall have a smooth transition to the link with no undercuts exceeding 1.0 mm. Additionally, at least 10% of the stud welds distributed through the length shall be dye penetrant tested according to ASTM E1417 or magnetic particle tested according to ASTM E1444 or equivalent. Cracks, lack of fusion or gross porosity are not acceptable. If defects are found, testing shall be extended to all stud welds in that length.

4.6 Retest, rejection and repair criteria

4.6.1 If the length over 5 links is short, the chain may be stretched by loading above the proof test load specified provided that the applied load is not greater than that approved and that only random lengths of the chain need stretching. If the length exceeds the specified tolerance, the over length chain links shall be cut out and 4.6.2 shall apply.

4.6.2 If single links are found to be defective or do not meet other applicable requirements, defective links may be cut out and a connecting common link inserted in their place. The individual heat treatment and inspection procedure of connecting common links is subject to the Classification Society's approval. Other methods for repair are subject to the written approval of the Classification Society and the end purchaser. Weld repair of chain is not permitted.

4.6.3 If a crack, cut or defect in the flash weld is found by visual or magnetic particle examination, it shall be ground down no more than 5% of the link diameter in depth and streamlined to provide no sharp contours. The final dimensions must still conform to the agreed standard.

4.6.4 If indications of interior of flash weld defects, in reference to the accepted calibration standards are detected during ultrasonic examination, 4.6.2 shall apply.

4.6.5 If link diameter, length, width and stud alignment do not conform to the required dimensions, these shall be compared to the dimensions of 40 more links; 20 on each side of the affected link. If a single particular dimension fails to meet the required dimensional tolerance in more than 2 of the sample links, all links shall be examined. Sec. 4.6.2 shall apply.

4.6.6 If a break load test fails, a thorough examination with the Surveyor informed in a timely manner is to be carried out to identify the cause of failure. Two additional break test specimens representing the same sampling length of chain are to be subjected to the break load test. Based upon satisfactory results of the additional tests and the results of the failure investigation, it will be decided what lengths of chain can be accepted. Failure of either or both additional tests will result in rejection of the sampling length of chain represented and 4.6.2 shall apply.

4.6.7 If a link fails during proof load testing, a thorough examination with the Surveyor informed in a timely manner is to be carried out to identify the probable cause of failure of the proof test. In the event that two or more links in the proof loaded length fail, that section of proof loaded length is to be rejected. The above failure investigation is to be carried out especially with regard to the presence in other lengths of factors or conditions thought to be causal to failure.

4.6.8 In addition to the above failure investigation, a break test specimen is to be taken from each side of the one failed link, and subjected to the breaking test. Where multiple chains are

W22 (cont)

produced simultaneously it is recognised that the preceding flash butt welded link and subsequent flash butt welded link will be on an alternative chain length or the other end of the chain length. In such cases the Classification Society may require that two additional break tests are to be taken from the lengths of chain that include the preceding and subsequent welded links. Based upon satisfactory results of both break tests and the results of the failure investigation, it will be decided what length of chain can be considered for acceptance. Failure of either or both breaking tests will result in rejection of the same proof loaded length. Replacement of defective links is to be in accordance with 4.6.2.
If the investigation identifies defects in the flash butt weld or a lower strength flash weld “a glue-weld” is found, additional NDT such as phased array UT is to be carried out to identify if other links are affected. A full assessment of the flash butt welding machine is to be carried out, together with assessment of the condition of the bar ends prior to welding.

4.6.9 Re-test requirements for tensile tests are to be in accordance with UR W2. Failure to meet the specified requirements of either or both additional tests will result in rejection of the sampling length of chain represented and 4.6.2 shall apply.

4.6.10 Re-test requirements for Charpy impact tests are to be in accordance with UR W2. Failure to meet the requirements will result in rejection of the sampling length represented and 4.6.2 shall apply.

4.7 Marking

4.7.1 The chain shall be marked at the following places:

- At each end.
- At intervals not exceeding 100 m.
- On connecting common links.
- On links next to shackles or connecting common links.

4.7.2 All marked links shall be stated on the certificate, and the marking shall make it possible to recognize leading and tail end of the chain. In addition to the above required marking, the first and last common link of each individual charge used in the continuous length shall be traceable and adequately marked.

The marking shall be permanent and legible throughout the expected lifetime of the chain.

4.7.3 The chain shall be marked on the studs as follows:

- Chain grade
- Certificate No.
- Classification Society's stamp

4.7.4 The Certificate number may be exchanged against an abbreviation or equivalent. If so, this shall be stated in the certificate.

4.7.5 The chain certificate shall contain information on number and location of connecting common links. The certificate number and replacement link number may be exchanged against an abbreviation or equivalent. If so, this shall be stated in the certificate.

4.8 Documentation

4.8.1 A complete Chain Inspection and Testing Report in booklet form shall be provided by the chain manufacturer for each continuous chain length. This booklet shall include all

W22 (cont)

dimensional checks, test and inspection reports, NDT reports, process records, photographs as well as any nonconformity, corrective action and repair work.

4.8.2 Individual certificates are to be issued for each continuous single length of chain.

4.8.3 All accompanying documents, appendices and reports shall carry reference to the original certificate number.

4.8.4 The manufacturer will be responsible for storing, in a safe and retrievable manner, all documentation produced for a period of at least 10 years.

W22
(cont)

5 TESTING AND INSPECTION OF ACCESSORIES

5.1 General

5.1.1 This section applies to but is not limited to mooring equipment accessories such as detachable connecting links (shackles), detachable connecting plates (triplates), end shackles, swivels and swivel shackles, and subsea connectors.

5.1.2 All accessories are to be subjected to proof load tests, sample break load tests and sample mechanical tests after final heat treatment in the presence of a Surveyor. Where the manufacturer has a procedure to record proof loads and the Surveyor is satisfied with the adequacy of the recording system, he need not witness all proof load tests. The Surveyor is to satisfy himself that the testing machines are calibrated and maintained in a satisfactory condition. Prior to testing and inspection the chain accessories are to be free from scale, paint or other coating.

5.1.3 For accessory production a Manufacturing Procedure Specification (MPS) is to be submitted to the Classification Society that details all critical aspects of accessory production, casting, forging, heat treating (including arrangement and spacing of components in the heat treatment furnaces), quenching, mechanical testing, proof and break loading and NDE.

5.2 Proof and break load tests

5.2.1 All accessories are to be subjected to the proof load specified for the corresponding stud link chain.

5.2.2 Chain accessories are to be tested at the break load prescribed for the grade and size of chain for which they are intended. At least one accessory out of every batch or every 25 accessories, whichever is less, is to be tested.

5.2.2.1 For individually produced, individually heat treated, accessories or accessories produced in small batches (less than 5), alternative testing will be subject to special consideration. Alternative testing is to be approved by the Classification Society and the following additional conditions may apply.

(a) Alternative testing is described in a written procedure and manufacturing procedure specification (MPS).

(b) A finite element analysis is provided at the break load and demonstrates that the accessory has a safety margin over and above the break load of the chain.

(c) Strain age testing (as per approved procedure by the Classification Society) is carried out on the material grade produced to the same parameters at the time of qualification.

(d) If an accessory is of a large size that will make heat treating in batches unfeasible or has a unique design, strain gauges are to be applied during the proof and break load tests during initial qualification and during production. The strain gauge results from production are to be comparable with the results from qualification.

5.2.3 A batch is defined as accessories that originate from the same heat treatment charge and the same heat of steel. Reference sections 2.3 and 2.4.

5.2.4 The accessories which have been subjected to the break load test are to be destroyed and not used as part of an outfit, with the exceptions given in 5.2.5.

W22 (cont)

5.2.5 Where the accessories are of increased dimension or alternatively a material with higher strength characteristics is used, they may be included in the outfit at the discretion of the Classification Society, provided that;

(a) the accessories are successfully tested at the prescribed breaking load appropriate to the chain for which they are intended, and

(b) it is verified by procedure tests that such accessories are so designed that the breaking strength is not less than 1.4 times the prescribed breaking load of the chain for which they are intended.

(c) strain age properties have been carried out on the material grade produced to the same parameters.

(d) strain gauges are to be applied during the break load test in the high stress locations to monitor that the strains stay within allowable limits.

5.3 Dimensions and dimensional tolerances

5.3.1 At least one accessory (of the same type, size and nominal strength) out of 25 is to be checked for dimensions after proof load testing. The manufacturer is to provide a statement indicating compliance with the purchaser's requirements.

5.3.2 The following tolerances are applicable to accessories:

a) Nominal diameter: + 5 percent, - 0 percent
b) Other dimensions: ± 2½ percent

These tolerances do not apply to machined surfaces.

5.4 Mechanical tests

5.4.1 Accessories are to be subjected to mechanical testing as described in Section 2.3 and 2.4. Mechanical tests are to be taken from proof loaded full size accessories that have been heat treated with the production accessories they represent. At least one accessory out of every batch or every 25 accessories, whichever is less, is to be tested. Hardness tests are to be carried out on finished accessories. The frequency and locations are to be agreed with the Classification Society. The recorded values are for information only and used as an additional check to verify that the heat treatment process has been stable during the accessory production.

The use of separate representative coupons is not permitted except as indicated in 5.4.5 below.

5.4.2 Test location of forged shackles. Forged shackle bodies and forged Kenter shackles are to have a set of three impact tests and a tensile test taken from the crown of the shackle. Tensile tests on smaller diameter shackles can be taken from the straight part of the shackle, where the geometry does not permit a tensile specimen from the crown. The tensile properties and impact values are to meet the requirements of Table 3 in the locations specified in Figure 3, with the Charpy pieces on the outside radius.

5.4.3 The locations of mechanical tests of cast shackles and cast Kenter shackles can be taken from the straight part of the accessory. The tensile properties and impact values are to meet the requirements of Table 3 in the locations specified in Figure 3.

W22 (cont)

5.4.4 The locations of mechanical tests of other accessories with complex geometries are to be agreed with the Classification Society.

For non-circular sections, 1/4*t* (thickness) from the surface is considered appropriate.

Rolled plates are to be tested to the Standard to which they are produced.

5.4.5 For individually produced (heat treated) accessories or accessories produced in small batches, (less than 5), alternative testing can be proposed to the Classification Society. Each proposal for alternative testing is to be detailed by the manufacturer in a written procedure and submitted to the Classification Society, and the following additional conditions may apply:

(a) If separately forged or cast coupons are used, they are to have a cross-section and, for forged coupon, a reduction ratio similar to that of the accessories represented, and are to be heat treated in the same furnace and quenched in the same tank at the same time, as the actual forgings or castings. Thermocouples are to be attached to the coupon and to the accessories.

(b) If separately forged or cast coupons are agreed, it is to be verified by procedure test that coupon properties are representative of accessory properties.

5.4.6 A batch is defined as accessories that originate from the same heat treatment charge and the same heat of steel. Reference sections 2.3 and 2.4.

5.4.7 Mechanical tests of pins are to be taken as per Figure 3 from the mid length of a sacrificial pin of the same diameter as the final pin. For oval pins the diameter taken is to represent the smaller dimension. Mechanical tests may be taken from an extended pin of the same diameter as the final pin that incorporates a test prolongation and a heat treatment buffer prolongation, where equivalence with mid length test values have been established. The length of the buffer is to be at least equal to 1 pin diameter dimension which is removed after the heat treatment cycle is finished. The test coupon can then be removed from the pin. The buffer and test are to come from the same end of the pin as per Figure 6.

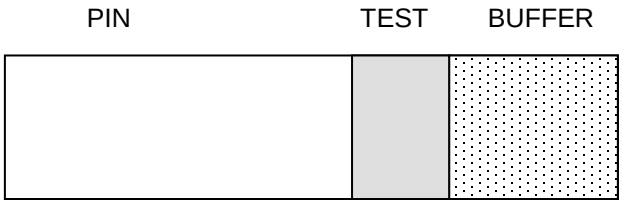

Figure 6 Buffer and test piece location

5.5 Non-destructive examination after proof load testing

5.5.1 All chain accessories are to be subjected to a close visual examination. Special attention is to be paid to machined surfaces and high stress regions. Prior to inspection, chain accessories are to have a suitably prepared surface as per the applied NDE testing standard. All non-machined surfaces are to be sand or shot blast to permit a thorough examination. Where applicable, accessories shall be dismantled for inspection of internal surfaces. All accessories are to be checked by magnetic particles or dye penetrant. UT of accessories may be required by the Classification Society. The acceptance /rejection criteria of UT established for the design is to be met.

W22 (cont)

5.5.2 Testing is to be performed in accordance with a recognized Standard, such as those indicated below, or equivalent. The procedures, together with acceptance/rejection criteria are to be submitted to the Classification Society for review.
Manufacturers shall prepare written procedures for NDE. NDE personnel shall be qualified and certified according to ISO 9712, ACCP or equivalent. Personnel qualification to an employer or responsible agency based qualification scheme as SNT-TC-1A may be accepted if the employer's written practice is reviewed and found acceptable and the Level III is ASNT Level III, ISO 9712 Level III or ACCP Professional Level III and certified in the applicable method. NDE operators shall be qualified to at least level II.

Magnetic particle testing (MT) of forgings:
- EN 10228-1, ASTM A275, using wet continuous magnetization technique or equivalent standards such as ISO 4986, IACS Rec 69

Ultrasonic testing (UT) of forgings:
- EN 10228-3, ASTM A388, ISO 13588

Magnetic particle testing (MT) of castings:
- ASTM E709, using wet continuous magnetization technique

Ultrasonic testing (UT) of castings:
- ASTM A609, ISO 13588

All surfaces shall be magnetic particle tested (MT). Testing shall be performed in accordance with standards referenced using the fluorescent technique. As a minimum surfaces shall be free from:

- relevant linear indications exceeding 1.6 mm in transverse direction
- relevant linear indications exceeding 3.2 mm in longitudinal direction
- relevant non-linear indications exceeding 4.8 mm.

When required by the Classification Society, ultrasonic testing is to be carried out on 100% of cast or forged accessories. The acceptance/rejection criteria established for the design is to be met.

5.5.3 The manufacturer is to provide a statement that non destructive examination has been carried out with satisfactory results. This statement should include a brief reference to the techniques and to the operator's qualification.

5.5.4 Weld repairs of finished accessories are not permitted.

5.6 Test failures

5.6.1 In the event of a failure of any test the entire batch represented is to be rejected unless the cause of failure has been determined and it can be demonstrated to the Surveyor's satisfaction that the condition causing the failure is not present in any of the remaining accessories.

5.7 Marking

5.7.1 Each accessory is to be marked as follows:

- Chain grade

W22
(cont)

5.7.2 The Certificate number may be exchanged against an abbreviation or equivalent. If so, this shall be stated in the certificate.

5.8 Documentation

5.8.1 A complete Inspection and Testing Report in booklet form shall be provided by the manufacturer for each order. This booklet shall include all dimensional checks, test and inspection reports, NDT reports, process records and example photographs of components positioned in furnaces, as well as any nonconformity, corrective action and repair work.

5.8.2 Each type of accessory shall be covered by separate certificates.

5.8.3 All accompanying documents, appendices and reports shall carry reference to the original certificate number.

5.8.4 The manufacturer will be responsible for storing, in a safe and retrievable manner, all documentation produced for a period of at least 10 years.

W22 (cont)

Appendix A - Chafing Chain for Single Point Mooring arrangements

A.1. Scope

These requirements apply to short lengths (approximately 8m) of 76mm diameter chain to be connected to hawsers for the tethering of oil carriers to single point moorings, FPSO's and similar uses.

A.2. Approval of Manufacturing

A.2.1 The chafing chain is to be manufactured by works approved by the Classification Society according to W22.1.3.

A.3. Materials

A.3.1 The materials used for the manufacture of the chafing chain are to satisfy the requirements of W22.2.

A.4. Design, manufacturing, testing and certification

A.4.1 The chafing chain is to be designed, manufactured, tested and certified in accordance with W22.3, W22.4 and W22.5, except that batch heat treatment is permitted.

A.4.2 The arrangement of the end connections is to be of an approved type.

A.4.3 The common link is to be of the stud link type – Grade R3 or R4.

A.4.4 The chafing chain is to be capable of withstanding the breaking test loads of 4884kN (Grade R3) and 6001kN (Grade R4). See Note 1.

A.4.5 The chain lengths shall be proof load tested in accordance with W22.4.2. The test load for Grade R3 is 3242kN and for Grade R4 is 4731kN.

Note 1:
Documented evidence of satisfactory testing of similar diameter mooring chain in the prior 6 month period may be used in lieu of break testing subject to agreement with the Classification Society.

Note 2:
The requirements herein are also applicable to other diameter chafing chains, such as 84 mm and 96 mm, subject to compliance with the proof and break load requirements specified for the chain grade and diameters in Section 3 Table 5.

End of Document

W23 Approval of Welding Consumables for High Strength Steels for Welded Structures

(1995) (Rev.1 1997) (Rev.2 Apr 2018) (Corr.1 June 2019)

1. General

1.1 Scope

1.1.1 These requirements supplement the UR W17 and give the conditions of approval and inspection of welding consumables used for high strength steels for welded structures according to UR W16 with yield strength levels from 420 N/mm^2 up to 960 N/mm^2, and impact grades A, D, E and F, except that impact grade F is not applicable for 890 N/mm^2 and 960 N/mm^2 yield strength levels.

Where no special requirements are given, those of UR W17 apply in analogous manner.

1.1.2 The welding consumables preferably to be used for the steels concerned are divided into several categories as follows:

- covered electrodes for manual welding,
- wire-flux combinations for multi-run* submerged arc welding,
- solid wire-gas combinations for arc welding (including rods for gas tungsten arc welding),
- flux cored wire with or without gas for arc welding.

1.2 Grading, Designation

1.2.1 Based on the yield strength of the weld metal, the welding consumables concerned are divided into eight (yield) strength groups:

- Y42 - for welding steels with minimum yield strength 420 N/mm^2
- Y46 - for welding steels with minimum yield strength 460 N/mm^2
- Y50 - for welding steels with minimum yield strength 500 N/mm^2
- Y55 - for welding steels with minimum yield strength 550 N/mm^2
- Y62 - for welding steels with minimum yield strength 620 N/mm^2

* Wire-flux combinations for single or two-run technique are subject to special consideration of the Classification Society.

Note:

1. Rev.2 of this UR is to be uniformly implemented by IACS Societies when an application for approval is dated on or after 1 July 2019.

W23 (cont)

- Y69 - for welding steels with minimum yield strength 690 N/mm^2
- Y89 - for welding steels with minimum yield strength 890 N/mm^2
- Y96 - for welding steels with minimum yield strength 960 N/mm^2

1.2.2 Each of the eight (yield) strength groups is further divided into three main grades in respect of Charpy V-notch impact test requirements (test temperatures):

- Grade 3, test temperature -20°C
- Grade 4, test temperature -40°C
- Grade 5, test temperature -60°C

1.2.3 Analogously to the designation scheme used in UR W17 the welding consumables for high strength steels are subject to classification designation and approval as follows:

- According to 1.2.2 with the quality grades **3, 4 or 5**
- With the added symbol, Y and an appended code number designating the minimum yield strength of the weld metal corresponding 1.2.1: Y42, Y46, Y50, Y55, Y62, Y69, Y89 and Y96.
- With the added symbol H10 or H5 for controlled hydrogen content of the weld metal,
- With the added symbol, **S** (= semi-automatic) for semi-mechanised welding,
- With the added symbol, **M** designating multi-run technique* (and is applicable only to welding consumables for fully mechanised welding).

1.2.4 Each higher quality grade includes the one (or those) below Grade A... and D... steels acc. to UR W16 are to be welded using welding consumables of at least quality grade 3, grade E... steels using at least quality grade 4 and grade F... steels using at least quality grade 5., see the following table:

Consumable Grade	Steel Grades covered
3Y..	D.. and A..
4Y..	E.., D.. and A..
5Y..	F.., E.., D.. and A..

Welding consumables approved with grades ..Y42, ..Y46 and ..Y50 are also considered suitable for welding steels in the two strength levels below that for which they have been approved. Welding consumables approved with grades ..Y55, ..Y62 and ..Y69 are also considered suitable for welding steels in the one strength level below that for which they have been approved.

* Wire-flux combinations for single or two-run technique are subject to special consideration of the Classification Society.

W23 (cont)

Welding consumables with grade Y89 are considered suitable for welding steels in the same strength level only. Welding consumables with grade Y96 are also considered suitable for welding steels in the one strength level below that for which they have been approved.

For grades Y89 and Y96, where the design requirements permit undermatching weld joint, then welding consumables within the scope of this UR can be considered subject to Society discretion and Manufacturer's recommendations.

The Society may, in individual cases, restrict the range of application in (up to) such a way, that approval for any one strength level does not justify approval for any other strength level.

1.3 Manufacture, testing and approval procedure

1.3.1 Manufacturer's plant, production methods and quality control measures shall be such as to ensure reasonable uniformity in manufacture, see also UR W17.

1.3.2 Testing and approval procedure shall be in accordance with UR W17, sections 2 and 3 and as required in UR W17 for the individual categories (types) of welding consumables mentioned in 1.1.2 above.

2. Testing of the weld metal

2.1 For testing the deposited weld metal, test pieces analogous to those called for in UR W17, sections 4.2, 5.2, 6.2 or 6.3 respectively shall be prepared, depending on the type of the welding consumables (and according to the welding process). The base metal used shall be a fine-grained structural steel compatible with the properties of the weld metal, or the side walls of the weld shall be buttered with a weld metal of the same composition.

2.2 The chemical composition of the deposited weld metal shall be determined and certified in a manner analogous to that prescribed in UR W17, section 4.2.2. The results of the analysis shall not exceed the limit values specified in the standards or by the manufacturer, the narrower tolerances being applicable in each case.

2.3 Depending on the type of the welding consumables (and according to the welding process), the test specimens prescribed in UR W17, sections 3.1 and 4.2, 5.2, 6.2 or 6.3 respectively shall be taken from the weld metal test pieces in a similar manner.

2.4 The mechanical properties must meet the requirements stated in Tables 1 and 2. The provisions of UR W17 apply in analogous manner to the performance of the tests, including in particular the maintenance of the test temperature in the notched bar impact test and the carrying out of results.

W23 (cont)

Table 1 Required toughness properties of the weld metal

Quality grade	Test temperature [°C]	Minimum notch impact energy [J][1)]
3	-20	Y42: ≥ 47 Y46: ≥ 47 Y50: ≥ 50 Y55: ≥ 55 Y62: ≥ 62 Y69: ≥ 69 Y89: ≥ 69[2)] Y96: ≥ 69[2)]
4	-40	
5	-60	

1) Charpy V-notch impact test specimen, mean value of three specimens; for requirements regarding minimum individual values and retests, see UR W17, section 3.3.2.

2) Quality grade 5 is not applicable for Y89 and Y96 grade consumables.

Table 2 Required strength properties of the weld metal

Symbols added to quality grade	Minimum yield strength or 0.2% proof stress [N/mm^2]	Tensile Strength [N/mm^2]	Minimum elongation [%]
Y42	420	520-680	20
Y46	460	540-720	20
Y50	500	590-770	18
Y55	550	640-820	18
Y62	620	700-890	18
Y69	690	770-940	17
Y89	890	940-1100	14
Y96	960	980-1150	13

3. Testing on welded joints

3.1 Depending on the type of the welding consumables (and according to the welding process), the testing on the welded joints shall be performed on butt-weld test pieces in analogous manner to UR W17, sections 4.3, 5.2, 6.2, 6.3, or 6.4 respectively.

3.2 Depending on the type of the welding consumables (and according to the welding process), the butt-weld test pieces called for in para. 3.1 shall be welded in a manner analogous to that prescribed in UR W17. The base metal used shall be a high-strength fine-grained structural steel with a minimum yield strength and tensile strength matching the consumable grade being approved and compatible with the added symbol for which application is made.

3.3 Depending on the type of the welding consumables (and according to the welding process), the test specimens described in UR W17 shall be taken from the butt-weld test pieces.

3.4 The mechanical properties must meet the requirements stated in Table 3. The provisions of UR W17 apply in analogous manner to the performance of the tests, including in particular the maintenance of the test temperatures in the notched bar impact test and the requirements regarding the retest specimens.

W23 (cont)

Table 3 Required properties of welded joints

Quality grade	Added symbol	Minimum tensile strength [N/mm²]	Minimum notch impact energy, test temperature	Minimum bending angle[1)]	Bend ratio D/t[2)]
3 to 5 accordance with Table 1	Y42	520	Depending on the quality grade & yield strength in accordance Table 1	120°	4
	Y46	540			4
	Y50	590			4
	Y55	640			5
	Y62	700			5
	Y69	770			5
	Y89	940			6
	Y96	980			7

1) Bending angle attained before the first incipient crack, minor pore exposures up to a maximum length of 3mm allowed.

2) D = Mandrel diameter, t = specimen thickness

3.5 Where the bending angle required in Table 3 is not achieved, the specimen may be considered as fulfilling the requirements, if the bending elongation on a gauge length Lo fulfills the minimum elongation requirements stated in Table 2. The gauge length Lo = Ls + t (Ls = width of weld, t = specimen thickness), see sketch below.

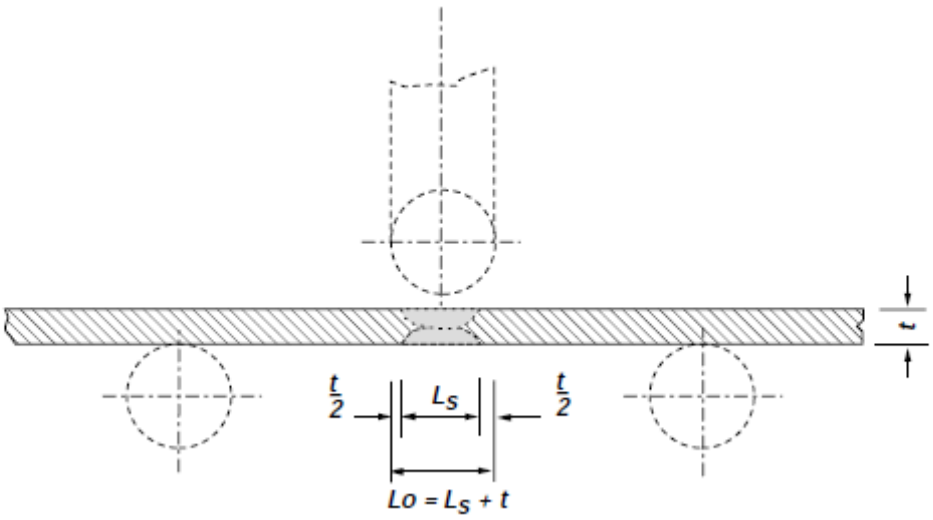

4. Hydrogen test

4.1 The welding consumables, other than solid wire-gas combinations, shall be subjected to a hydrogen test in accordance with the mercury method to ISO 3690, or any other method such as the gas chromatographic method which correlates with that method, in respect of cooling rate and delay times during preparation of the weld samples, and the hydrogen volume determinations.

W23 (cont)

4.2 The diffusible hydrogen content of the weld metal determined in accordance with the provisions of UR W17, section 4.5 shall not exceed the limits given in table 4.

Table 4 Allowable diffusible hydrogen content

Yield strength group	Hydrogen symbol	Maximum hydrogen content [cm^3/100 g deposited weld metal]
Y42 Y46 Y50	H 10	10
Y55 Y62 Y69	H 5	5
Y89 Y96	H5	5

5. Annual repeat test

The annual repeat tests specified in UR W17 shall entail the preparation and testing of weld metal test pieces as prescribed under 2. For grades Y69 to Y96 annual hydrogen test is required. In special cases, the Society may require more extensive repeat tests.

End of Document

W24 Cast Copper Alloy Propellers

(1996)
(Rev.1 1997)
(Rev.2 May 2004)
(Rev.3 May 2012)
(Corr.1 Jan 2013)
(Rev.4 July 2020)
(Rev.5 Sep 2023)

1. Scope

1.1 These unified requirements are applicable to the manufacture, inspection and repair procedures of cast copper alloy propellers, blades and bosses.

1.2 Where the use of alternative alloys is proposed, particulars of chemical composition, mechanical properties and heat treatment are to be submitted for approval.

1.3 These requirements may also be used for the repair of propellers damaged in service, subject to prior agreement with the Classification Society.

Notes:

1. New version of this UR supersedes the IACS unified requirements nos. K1 and K2 as well as the IACS Recommendation no. 4.

2. Rev.3 of this UR is applicable to the moulding, casting, inspection and repair procedures of cast copper alloy propellers, blades and bosses from 1 July 2013.

3 Changes introduced in Rev.4 are to be uniformly implemented by IACS Societies on ships contracted for construction on or after 1 July 2021, or when the application for certification of cast copper alloy propellers is dated on or after 1 July 2021, or the application for certification of manufacturer approval is dated on or after 1 July 2021.

4 Changes introduced in Rev.5 are to be uniformly implemented by IACS Societies on ships contracted for construction on or after 1 January 2025, or when the application for certification of cast copper alloy propellers is dated on or after 1 January 2025, or the application for certification of manufacturer approval is dated on or after 1 January 2025.

5 The “contracted for construction” date means the date on which the contract to build the vessel is signed between the prospective owner and the shipbuilder. For further details regarding the date of “contract for construction”, refer to IACS Procedural Requirement (PR) No.29.

W24 (cont)

2. Foundry approval

2.1 Approval

All propellers and propeller components are to be manufactured by foundries approved by the Classification Society. The castings are to be manufactured and tested in accordance with the requirements of these rules.

2.2 Application for approval

It is the manufacturer's responsibility to assure that effective quality, process and production controls during manufacturing are adhered to within the manufacturing specification. The manufacturing specification shall be submitted to the Classification Society at the time of initial approval, and shall at least include the following particulars: description of the foundry facilities, copper alloy material specification, runner and feeder arrangements, manufacturing procedures, non-destructive testing and repair procedures.

2.3 Scope of the approval test

The scope of the approval test is to be agreed with the Classification Society. This should include the presentation of cast test coupons of the propeller materials in question for approval testing in order to verify that the chemical composition and the mechanical properties of these materials comply with these rules.

2.4 Inspection facilities

The foundry is to have an adequately equipped laboratory, manned by experienced personnel, for the testing of moulding materials chemical analyses, mechanical testing, microstructural testing of metallic materials and non-destructive testing. Where testing activities are assigned to other companies or other laboratory, additional information required by the Society is to be included.

3. Moulding and casting

3.1 Pouring

The pouring must be carried out into dried moulds using degassed liquid metal. The pouring is to be controlled as to avoid turbulences of flow. Special devices and/or procedures must prevent slag flowing into the mould.

3.2 Stress relieving

Subsequent stress relieving heat treatment may be performed to reduce the residual stresses. For this purpose, the manufacturer shall submit a specification containing the details of the heat treatment to the Classification Society for approval. For stress relieving temperatures and holding times see tables 4 and 5.

4. Quality of castings

4.1 Freedom from defects

All castings must have a workmanlike finish and must be free from defects which would be prejudicial to their proper application in service. Minor casting defects which may still be visible after machining such as small sand and slag inclusions, small cold shuts and scabs shall be trimmed off by the manufacturer in accordance with W24.11.

W24 (cont)

4.2 Removal of defects

Casting defects which may impair the serviceability of the castings, e.g. major non-metallic inclusions, shrinkage cavities, blow holes and cracks, are not permitted. They may be removed by one of the methods described in W24.11 and repaired within the limits and restrictions for the severity zones. Full description and documentation are to be available for the surveyor.

5. Dimensions, dimensional and geometrical tolerances

5.1 The verification of dimensions, the dimensional and geometrical tolerances is the responsibility of the manufacturer.

The report on the relevant examinations is to be submitted to the Surveyor, who may require checks to be made in his presence.

5.2 Static balancing is to be carried out on all propellers in accordance with the approved drawing. Dynamic balancing is necessary for propellers running above 500 rpm.

6. Chemical composition and metallurgical characteristics

6.1 Chemical composition

Typical copper propeller alloys are grouped into the four types CU 1, CU 2, CU 3 and CU 4 depending on their chemical composition as given in table 1. Copper alloys whose chemical composition deviate from the typical values of Table 1 must be specially approved by the Classification Society.

Table 1 Typical chemical compositions of cast copper alloys for propellers

Alloy type	Cu(%)	Al(%)	Mn(%)	Zn(%)	Fe(%)	Ni(%)	Sn(%)	Pb(%)
CU1	52-62	0,5-3,0	0,5-4,0	35-40	0,5-2,5	max 1,0	max 1,5	max 0,5
CU2	50-57	0,5-2.0	1,0-4,0	33-38	0,5-2,5	3,0-8,0	max 1,5	max 0,5
CU3	77-82	7,0-11,0	0,5-4,0	max 1,0	2,0-6,0	3,0-6,0	max 0,1	max 0,03
CU4	70-80	6,5-9,0	8,0-20,0	max 6,0	2,0-5,0	1,5-3,0	max 1,0	max 0,05

The manufacturer is to maintain records of the chemical analyses of the production casts, which are to be made available to the Surveyor.

6.2 Metallurgical characteristics

Note:

"The main constituents of the microstructure in the copper-based alloys categories CU 1 and CU 2 are alpha and beta phase.

Important properties such as ductility and resistance to corrosion fatigue are strongly influenced by the relative proportion of beta phase (too high a percentage of beta phase having a negative effect on these properties). To ensure adequate cold ductility and corrosion fatigue resistance, the proportion of beta phase is to be kept low. The concept of the zinc

W24 (cont)

equivalent should be used as control since it summarizes the effect of the tendency of various chemical elements to produce beta phase in the structure."

The structure of CU 1 and CU 2 type alloys must contain an alpha phase component of at least 25 % as measured on a test bar by the manufacturer. To ensure adequate ductility and corrosion fatigue resistance, the proportion of beta phase is to be kept low. For this purpose, the zinc equivalent defined by the following formula shall not exceed a value of 45 %:

$$\textit{Zinc}\ \text{equivalent}\ (\%) = 100 - \frac{100.\ \%Cu}{100 + A}$$

In which A = %Sn + 5 x %Al - 0,5 x %Mn - 0,1 x %Fe - 2,3 x %Ni.

Note:

The negative sign in front of the elements Mn, Fe and Ni signifies that these elements tend to reduce the proportion of beta phase.

The micro structure of alloy types CU 1 and CU 2 shall be verified by determining the proportion of alpha phase. For this purpose, at least one specimen shall be taken from each heat. The proportion of alpha phase shall be determined as the average value of 5 counts.

7. Mechanical properties and tests

7.1 Standardized alloys

The mechanical properties are to comply with the values given in table 2. These values are applicable to test specimens taken from separately cast samples in accordance with Fig. 1, or with a recognized standard.

Note:

These properties are a measure of the mechanical quality of the metal in each heat; and they are generally not representative of the mechanical properties of the propeller casting itself, which may be up to 30 % lower than that of a separately cast test coupon.

For integrally cast test specimens the requirements are specially to be agreed with the Classification Society.

Table 2 Mechanical properties of cast copper alloys for propellers (separately cast test coupons)

Alloy type	Proof stress R_p 0,2 [N/mm^2] min.	Tensile strength R_m [N/mm^2] min.	Elongation A_5 [%] min.
CU1	175	440	20
CU2	175	440	20
CU3	245	590	16
CU4	275	630	18

W24
(cont)

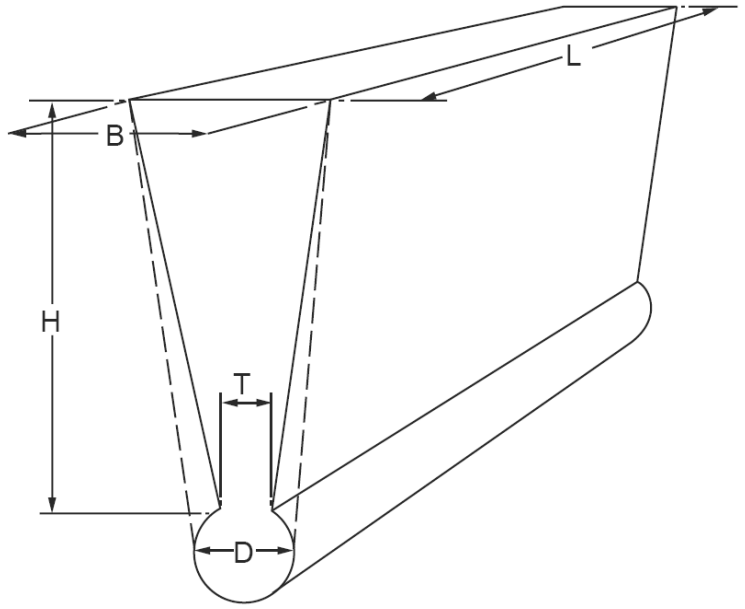

H ⩾ 100 mm
B ≥ 50 mm
L > 150 mm
T ≥ 15 mm
D ≥ 25 mm

Fig.1 Test sample casting

7.2 Other alloys

The mechanical properties of alloys not meeting the minimum values of Table 2 are to comply with a specification approved by the Classification Society.

7.3 Tensile tests and specimens

Tensile tests and specimens are to be in accordance with UR W2.

Generally, the specimens shall be taken from separately cast sample pieces in accordance with W24.7.1. The test samples shall be cast in moulds made of the same material as the mould for the propeller and they must be cooled down under the same conditions as the propeller. At least one tensile test specimen shall be taken from each ladle.

If propellers are subjected to a heat treatment the test samples are to be heat treated together with them.

Where test specimens are to be taken from integrally cast test samples, this shall be the subject of special agreement with the Classification Society. Wherever possible, the test samples shall be located on the blades in an area lying between 0,5 to 0,6 R, where R is the radius of the propeller. The test sample material must be removed from the casting by non thermal procedures.

8. Definition of skew, severity zones

8.1 Definition of skew

The skew of a propeller is defined as follows:

The maximum skew angle of a propeller blade is defined as the angle, in projected view of the blade, between a line drawn through the blade tip and the shaft centreline and a second

W24 (cont)

line through the shaft centreline which acts as a tangent to the locus of the mid-points of the helical blade section, see Fig 2.

High skew propellers have a skew angle greater than 25°, low skew propellers a skew angle of up to 25°.

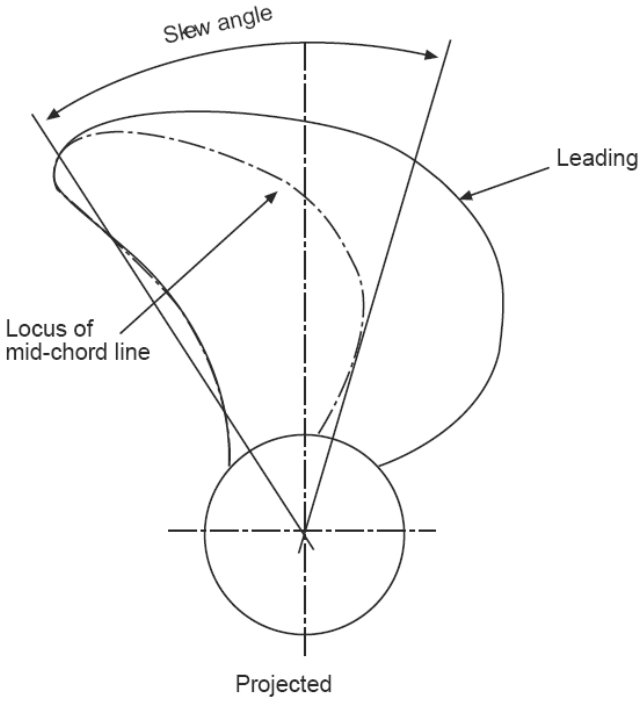

Fig.2 Definition of skew angle

8.2 Severity zones

In order to relate the degree of inspection to the criticality of defects in propeller blades and to help reduce the risk of failure by fatigue cracking after repair, propeller blades are divided into the three severity zones designated A, B and C.

Zone A is the region carrying the highest operating stresses and which, therefore, requires the highest degree of inspection. Generally, the blade thicknesses are greatest in this area giving the greatest degree of restraint in repair welds and this in turn leads to the highest residual stresses in and around any repair welds. High residual tensile stresses frequently lead to fatigue cracking during subsequent service so that relief of these stresses by heat treatment is essential for any welds made in this zone. Welding is generally not permitted in Zone A and will only be allowed after special consideration by the Classification Society . Every effort should be made to rectify a propeller which is either defective or damaged in this area without recourse to welding even to the extent of reducing the scantlings, if this is acceptable. If a repair using welding is agreed, postweld stress relief heat treatment is mandatory.

Zone B is a region where the operation stresses may be high. Welding should preferably be avoided but generally is allowed subject to prior approval from the Classification Society. Complete details of the defect / damage and the intended repair procedure are to be submitted for each instance in order to obtain such approval.

W24 (cont)

Zone C is a region in which the operation stresses are low and where the blade thicknesses are relatively small so that repair welding is safer and, if made in accordance with an approved procedure is freely permitted.

8.2.1 Low-skew propellers

Zone A is in the area on the pressure side of the blade, from and including the fillet to 0,4R, and bounded on either side by lines at a distance 0,15 times the chord length C_r from the leading edge and 0,2 times C_r from the trailing edge, respectively (see Fig. 3). Where the hub radius (R_b) exceeds 0,27R, the other boundary of zone A is to be increased to 1,5R_b.

Zone A also includes the parts of the separate cast propeller hub which lie in the area of the windows as described in Fig. 5 and the flange and fillet area of controllable pitch and built-up propeller blades as described in Fig. 6.

Zone B is on the pressure side the remaining area up to 0,7R and on the suction side the area from the fillet to 0,7R (see Fig. 2).

Zone C is the area outside 0,7R on both sides of the blade. It also includes the surface of the hub of a monoblock propeller and all the surfaces of the hub of a controllable pitch propeller other than those designated Zone A above.

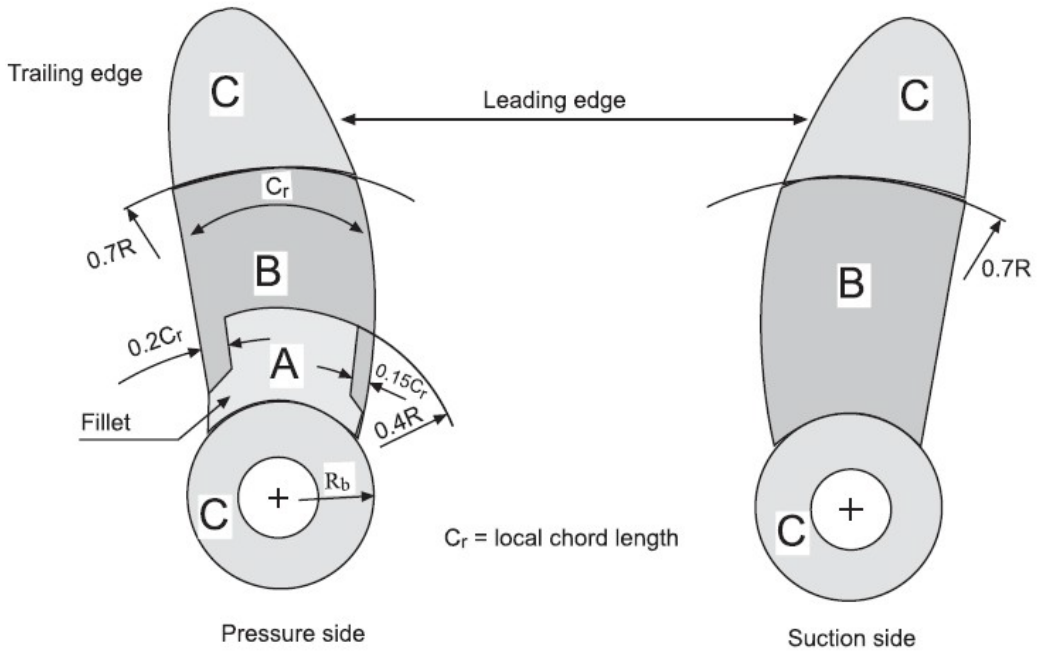

Fig.3 Severity zones for integrally cast low skew propellers

8.2.2 High-skew propellers

Zone A is the area on the pressure face contained within the blade root-fillet and a line running from the junction of the leading edge with the root fillet to the trailing edge at 0.9 R and at passing through the mid-point of the blade chord at 0.7 R and a point situated at 0.3 of the chord length from the leading edge at 0.4 R. It also includes an area along the trailing edge on the suction side of the blade from the root to 0.9 R and with its inner boundary at 0.15 of the chord lengths from the trailing edge. Zone B constitutes the whole of the remaining blade surfaces. Zone A and B are illustrated in Fig. 4.

W24
(cont)

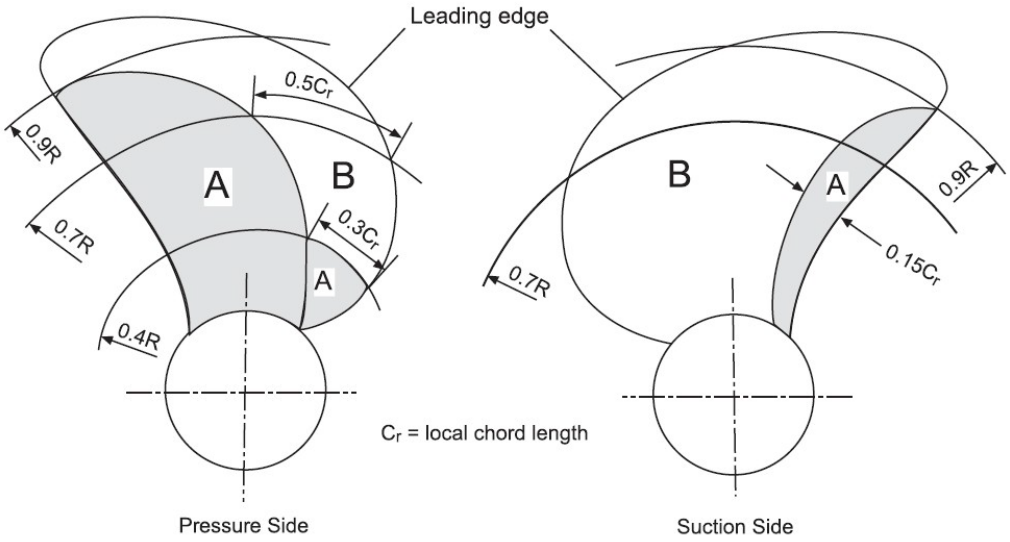

Fig.4 Severity zones in blades with skew angles greater than 25°

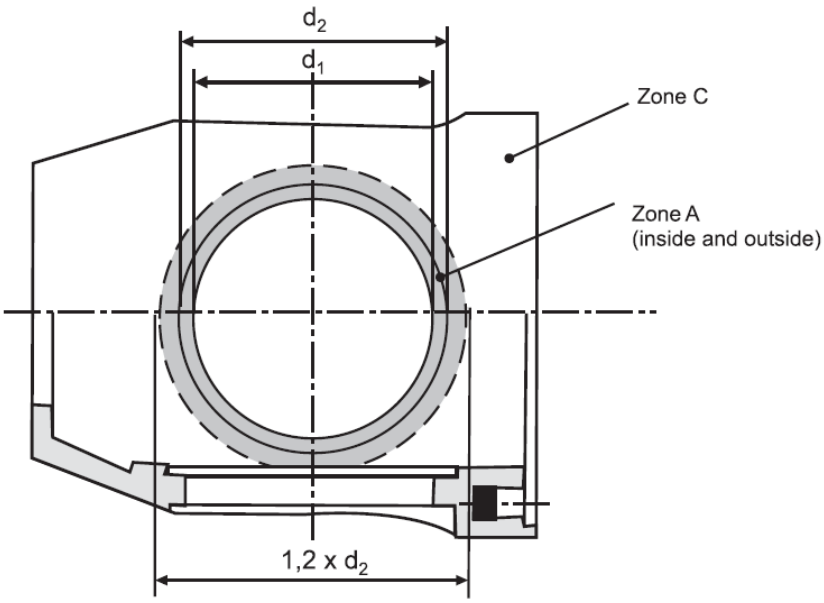

Fig.5 Severity zones for controllable pitch propeller boss

W24
(cont)

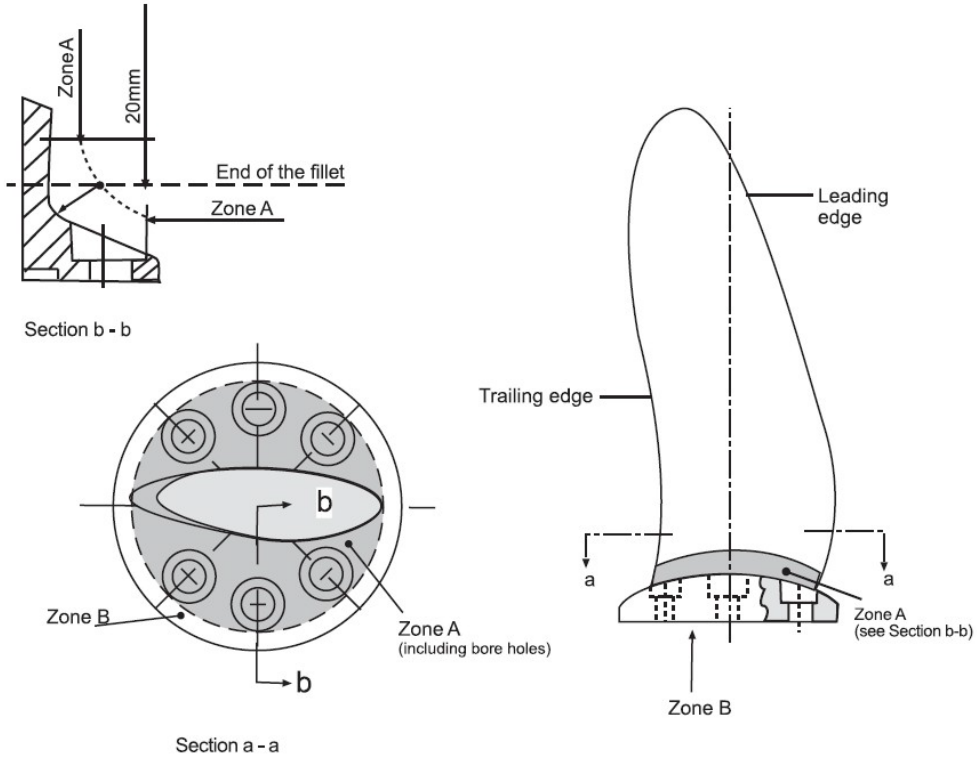

Fig.6 Severity zones for controllable pitch and built-up propeller

Note:

The remaining surface of the propeller blades is to be divided into the severity zones as given for solid cast propellers (cf. Fig. 3 and Fig. 4)

9. Non-destructive testing

9.1 Qualification of personnel involved in NDT

For the qualification of personnel refer to UR W35.

9.2 Visual testing

All finished castings are to be 100% visually inspected by the manufacturer. Castings are to be free from cracks, hot tears or other imperfections which, due to their nature, degree or extent, will interfere with the use of the castings. A general visual examination is to be carried out by the Surveyor.

9.3 Liquid penetrant testing

Liquid penetrant testing procedure is to be submitted to the Society and is to be in accordance with ISO 3452-1:2013 or a recognized standard. The acceptance criteria are specified in W24.10.

The severity zone A is to be subjected to a liquid penetrant testing in the presence of the Surveyor.

In zones B and C the liquid penetrant testing is to be performed by the manufacturer and may be witnessed by the Surveyor upon his request.

W24 (cont)

If repairs have been made either by grinding, straightening or by welding the repaired areas are additionally to be subjected to the liquid penetrant testing independent of their location and/or severity zone.

9.4 Radiographic and ultrasonic testing

When required by the Society or when deemed necessary by the manufacturer, further non-destructive testing (e.g. radiographic and/or ultrasonic testing) are to be carried out. The acceptance criteria or applied quality levels are to be agreed between the manufacturer and the Classification Society in accordance with a recognized standard.

Note: due to the attenuating effect of ultrasound within cast copper alloys, ultrasonic testing may not be practical in some cases, depending on the shape/type/thickness, and grain-growth direction of the casting.

In such cases, effective ultrasound penetration into the casting should be practically demonstrated on the item. This would normally be determined by way of back-wall reflection, and/or target features within the casting.

10. Acceptance criteria for liquid penetrant testing

10.1 Definitions of liquid penetrant indications

Indication: In the liquid penetrant testing an indication is the presence of detectable bleed-out of the penetrant liquid from the material discontinuities appearing at least 10 minutes after the developer has been applied.

Relevant indication: Only indications which have any dimension greater than 1.5mm shall be considered relevant for the categorization of indications.

Non-linear indication: indication having a length less than or equal to three times its width (i.e., $l \leq 3$ w).

Linear indication: indication having a length greater than three times its width (i.e., $l > 3$ w).

Aligned indications:

a) Non-linear indications form an alignment when the distance between indications is less than 2mm and at least three indications are aligned. An alignment of indications is considered to be a unique indication and its length is equal to the overall length of the alignment.

b) Linear indications form an alignment when the distance between two indications is smaller than the length of the longest indication.

W24 (cont)

Illustration of liquid penetrant indication is given in Fig. 7.

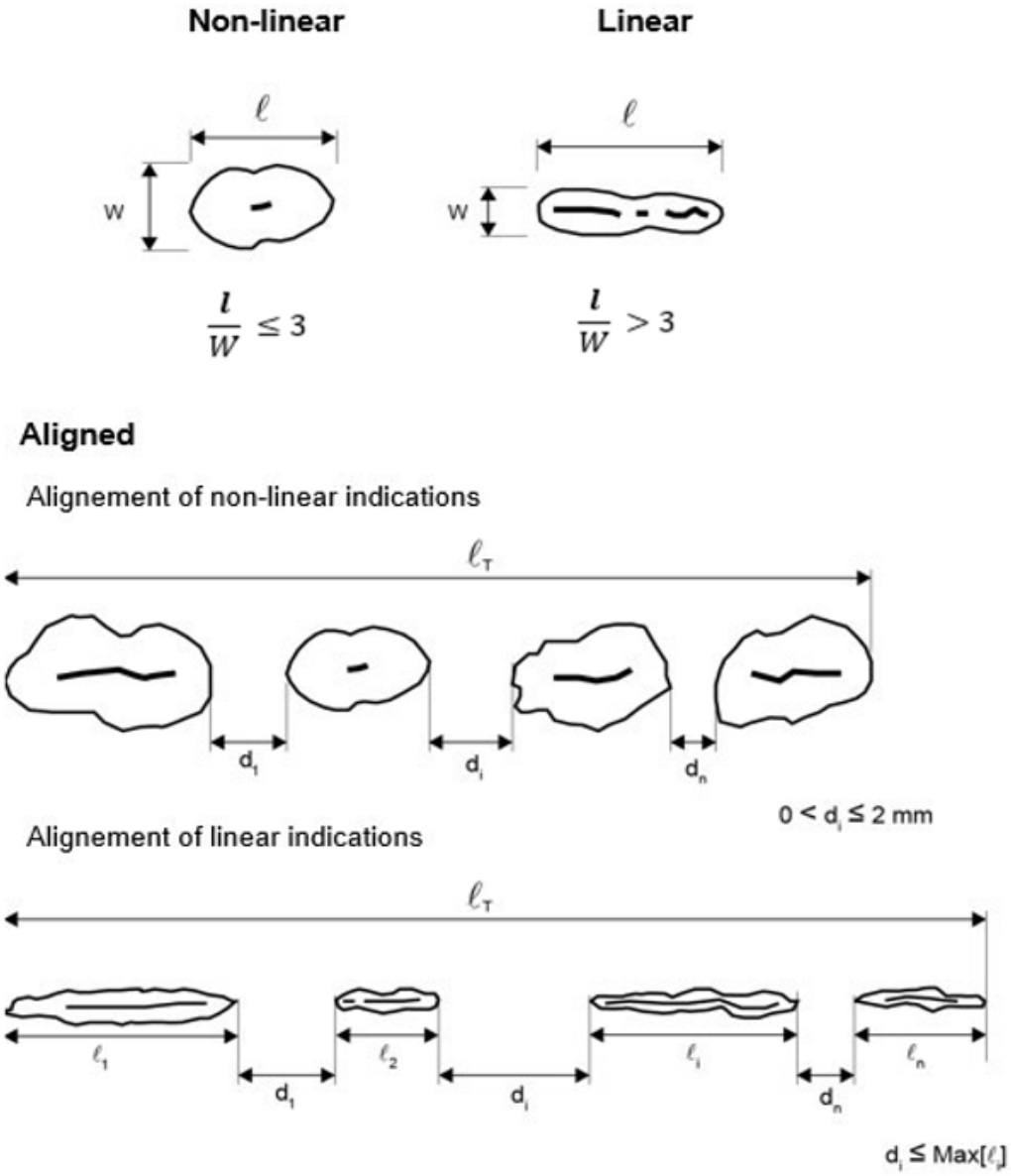

Fig.7 Shape of indications

10.2 Acceptance standard

The surface to be inspected is to be divided into reference areas of 100 cm^2. Each reference area may be square or rectangular with the major dimension not exceeding 250mm.

The area shall be taken in the most unfavourable location relative to the indication being evaluated.

The relevant indications detected shall, with respect to their size and number, not exceed the values given in the Table 3.

W24 (cont)

Table 3 Allowable number and size of relevant indications in a reference area of 100 cm^2, depending on severity zones[1)]

Severity zones	Max. total number of indications	Type of indication	Max. number of each type[1)2)]	Max. acceptable value for "a" or "l" of indications [mm]
A	7	Non-linear	5	4
		Linear	2	3
		Aligned	2	3
B	14	Non-linear	10	6
		Linear	4	6
		Aligned	4	6
C	20	Non-linear	14	8
		Linear	6	6
		Aligned	6	6

Notes: 1) Singular non-linear indications less than 2 mm for zone A and less than 3 mm for the other zones are not considered relevant.

2) The total number of non-linear indications may be increased to the max. total number, or part thereof, represented by the absence of linear or aligned indications.

Areas which are prepared for welding are independent of their location always to be assessed according to zone A. The same applies to the welded areas after being finished machined and/or grinded.

11. Repair of defects

11.1 Definition

Indications exceeding the acceptance standard of Table 3, cracks, shrinkage cavities, sand, slag and other non-metallic inclusions, blow holes and other discontinuities which may impair the safe service of the propeller are defined as defects and must be repaired.

11.2 Repair procedures

In general the repairs shall be carried out by mechanical means, e. g. by grinding, chipping or milling. Welding may be applied subject to the agreement of the Classification Society if the requirements of URW24.11.3, 11.4 and / or 11.5 will be complied with.

After milling or chipping grinding is to be applied for such defects which are not to be welded. Grinding is to be carried out in such a manner that the contour of the ground depression is as smooth as possible in order to avoid stress concentrations or to minimise cavitation corrosion. Complete elimination of the defective material is to be verified by liquid penetrant testing.

Welding of areas less than 5 cm^2 is to be avoided.

11.3 Repair of defects in zone A

In zone A, repair welding will generally not be allowed unless specially approved by the Classification Society.

W24 (cont)

Grinding may be carried out to an extent which maintains the blade thickness of the approved drawing.

The possible repair of defects which are deeper than those referred to above is to be considered by the Classification Society.

11.4 Repair of defects in zone B

Defects that are not deeper than dB (depth in zone B) = (t/40) mm or 2 mm (whichever is greatest) should be removed by grinding.
Note: t = min. local thickness in mm according to the Rules of the Classification Society

Those defects that are deeper than allowable for removal by grinding may be repaired by welding.

11.5 Repair of defects in zone C

In zone C, repair welds are generally permitted.

11.6 Repair documentation

The foundry is to maintain records of inspections, welding, and any subsequent heat treatment, traceable to each casting.

Before welding is started, full details of the extent and location of the repair, the proposed welding procedure, heat treatment and subsequent inspection procedures are to be submitted to the Classification Society for approval.

12. Welding repair procedure

12.1 General

Before welding is started, manufacturer shall submit to the Classification Society a detailed welding procedure specification covering the weld preparation, welding parameters, filler metals, preheating, post weld heat treatment and inspection procedures.

All weld repairs are to be carried out in accordance with qualified procedures, and, by welders who are qualified to a recognized standard. Welding Procedure Qualification Tests are to be carried out in accordance with Appendix A and witnessed by the Surveyor.

12.2 Preparation of welding repair

Defects to be repaired by welding are to be ground to sound material according to W24.11.2.

The welding grooves are to be prepared in such a manner which will allow a good fusion of the groove bottom.

The resulting ground areas are to be examined in the presence of the Surveyor by liquid penetrant testing in order to verify the complete elimination of defective material.

W24 (cont)

12.3 Welding repair procedure

Metal arc welding is to be used for all types of welding repair on cast copper alloy propellers.

Arc welding with coated electrodes and gas-shielded metal arc process (GMAW) are generally to be applied. Argon-shielded tungsten welding (GTAW) should be used with care due to the higher specific heat input of this process. Recommended filler metals, pre-heating and stress relieving temperatures are listed in Table 4.

All propeller alloys are generally to be welded in down-hand (flat) position. Where this cannot be done, gas-shielded metal arc welding should be carried out.

The section to be welded is to be clean and dry. Flux-coated electrodes are to be dried before welding according to the maker's instructions.

To minimize distortion and the risk of cracking, interpass temperatures are to be kept low. This is especially the case with CU 3 alloys.

Slag, undercuts and other defects are to be removed before depositing the next run.

All welding work is to be carried out preferably in the shop free from draughts and influence of the weather.

With the exception of alloy CU 3 (Ni-Al-bronze) all weld repairs are to be stress relief heat treated, in order to avoid stress corrosion cracking. However, stress relief heat treatment of alloy CU 3 propeller castings may be required after major repairs in zone B (and specially approved welding in Zone A) or if a welding consumable susceptible to stress corrosion cracking is used. In such cases the propeller is to be either stress relief heat treated in the temperature 450 to 500°C or annealed in the temperature range 650-800°C, depending on the extent of repair, c. f. Table 4.

The soaking times for stress relief heat treatment of copper alloy propellers should be in accordance with Table 5. The heating and cooling is to be carried out slowly under controlled conditions. The cooling rate after any stress relieving heat treatment shall not exceed 50°C/h until the temperature of 200°C is reached.

Table 4 Recommended filler metals and heat treatments

Alloy type	Filler metal	Preheat temperature °C [min]	Interpass temperature °C [max]	Stress relief temperature °C	Hot straightening temperature °C
CU1	Al-bronze[1)] Mn-bronze	150	300	350-500	500-800
CU2	Al-bronze Ni-Mn-bronze	150	300	350-550	500-800
CU3	Al-bronze Ni-Al-bronze[2)] Mn-Al-bronze	50	250	450-500	700-900
CU4	Mn-Al-bronze	100	300	450-600	700-850

Notes: 1) Ni-Al-bronze and Mn-Al-bronze are acceptable.

2) Stress relieving not required, if filler metal Ni-Al-bronze is used.

W24 (cont)

Table 5 Soaking times for stress relief heat treatment of copper alloy propellers

Stress relief temperature [°C]	Alloy grade CU1 and CU2		Alloy grade CU3 and CU4	
	Hours per 25 mm thickness	Max. recommended total time hours	Hours per 25 mm thickness	Max. recommended total time hours
350	5	15	-	-
400	1	5	-	-
450	1/2	2	5	15
500	1/4	1	1	5
550	1/4 1)	1/2 1)	1/2 2)	2 2)
600	-	-	1/4 2)	1 2)

Note: 1) 550℃ only applicable for CU 2 alloys.
2) 550°C and 600°C only applicable for CU 4 alloys.

13. Straightening

13.1 Application of load

For hot and cold straightening purposes, static loading only is to be used.

13.2 Hot straightening

Weld repaired areas may be subject to hot straightening, provided it can be demonstrated that weld properties are not impaired by the hot straightening operations.

Straightening of a bent propeller blade or a pitch modification should be carried out after heating the bent region and approximately 500 mm wide zones on either side of it to the suggested temperature range given in Table 4.

The heating should be slow and uniform and the concentrated flames such as oxy-acetylene and oxy-propane should not be used. Sufficient time should be allowed for the temperature to become fairly uniform through the full thickness of the blade section. The temperature must be maintained within the suggested range throughout the straightening operation. A thermocouple instrument or temperature indicating crayons should be used for measuring the temperature.

13.3 Cold straightening

Cold straightening should be used for minor repairs of tips and edges only. Cold straightening on CU 1, CU 2 and CU 4 bronze should always be followed by a stress relieving heat treatment, see Table 4.

14. Identification and marking

14.1 Identifications

The manufacturer is to adopt a system for the identification of all castings, which enable the material to be traced to its original cast. The Surveyor is to be given full facilities for so tracing the castings when required.

W24 (cont)

14.2 Marking

Each finished casting propeller shall be marked by the manufacturer at least with the following particulars:

a) Grade of cast material or corresponding abbreviated designation

b) Manufacturer's mark

c) Heat number, casting number or another identification ~~mark~~ enabling the manufacturing process to be traced back

e) Date of final inspection

f) Number of the Society's ~~test~~ certificate

g) Ice class symbol, where applicable

h) Skew angle for high skew propellers.

15. Manufacturer's certificates

For each casting propeller the manufacturer is to supply to the Surveyor a certificate containing the following details:

a) Purchaser and order number

b) Shipbuilding project number, if known

c) Description of the casting with drawing number

d) Diameter, number of blades, pitch, direction of turning

e) Grade of alloy and chemical composition of each heat

f) Heat or casting number

g) Final weight

h) Results of non-destructive tests and details of test procedure where applicable

i) Portion of alpha-structure for CU 1 and CU 2 alloys

k) Results of the mechanical tests

l) Casting identification No.

m) Skew angle for high skew propellers, see W24.8.1

W24 (cont)

Appendix A: Welding procedure qualification tests for repair of cast copper alloy propeller

1. General

1.1 This document gives requirements for qualification tests of welding procedures intended for the repair of cast copper alloy propellers.

1.2 For the welding procedure approval the welding procedure qualification tests are to be carried out with satisfactory results. The qualification tests are to be carried out with the same welding process, filler metal, preheating and stress-relieving treatment as those intended applied by the actual repair work. Welding procedure specification (WPS) is to refer to the test results achieved during welding procedure qualification testing.

1.3 Welding procedures qualified at a manufacturer are valid for welding in workshops under the same technical and quality management.

2. Test piece and welding of sample

2.1 The test assembly, consisting of cast samples, is to be of a size sufficient to ensure a reasonable heat distribution and according to Fig. A.1 with the minimum dimensions:

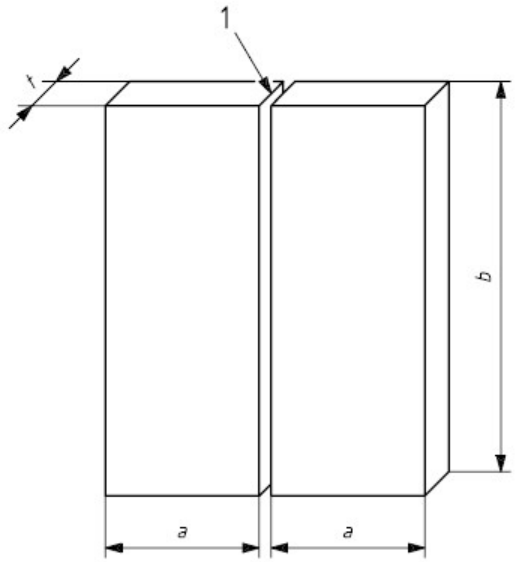

1: Joint preparation and fit-up as detailed in the preliminary welding procedure specification
a: minimum value 150mm
b: minimum value 300mm
t: material thickness.

Fig.A.1 Test piece for welding repair procedure

A test sample of minimum 30mm thickness is to be used.

2.2 Preparation and welding of test pieces are to be carried out in accordance with the general condition of repair welding work which it represents.

2.3 Welding of the test assemblies and testing of test specimens are to be witnessed by the Surveyor.

W24 (cont)

3. Examinations and tests

3.1 Test assembly is to be examined non-destructively and destructively in accordance with the Table A.1 and Fig. A.2:

Table A.1 Type of tests and extent of testing

Type of test (1)	Extent of testing
Visual testing	100% as per article 3.2
Liquid penetrant testing	100% as per article 3.2
Transverse tensile test	Two specimens as per article 3.3
Macro examination	Three specimens as per article 3.4
Note 1: bend or fracture test are at the discretion of the Classification Society	

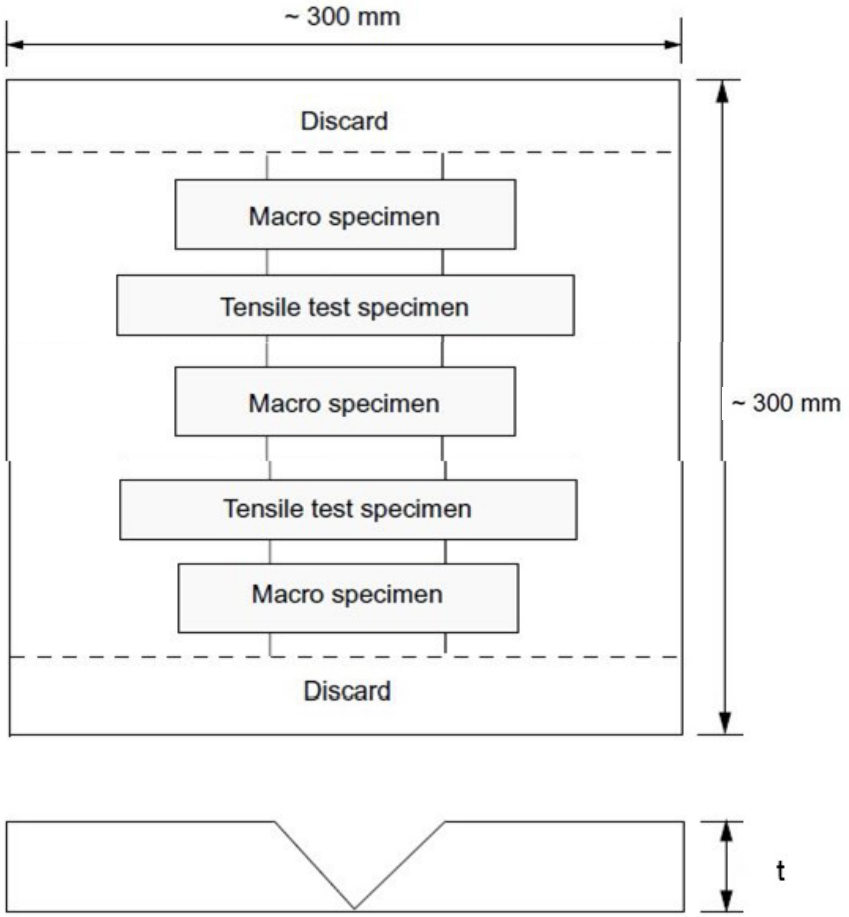

Fig.A.2 Test Specimen

3.2 Non-destructive testing

Test assembly is to be examined by visual and liquid penetrant testing prior to the cutting of test specimen. In case, that any post-weld heat treatment is required or specified, non-destructive testing is to be performed after heat treatment.

W24 (cont)

No cracks are permitted. Imperfections detected by liquid penetrant testing are to be assessed in accordance with W24.10.

3.3 Tensile test:

Two tensile tests are to be prepared as shown in UR W2 2.4.2.8 b). Alternatively tensile test specimens according to recognized standards acceptable to the Classification Society may be used. The tensile strength shall meet the values given in Table A.2.

Table A.2 Required tensile strength values

Alloy Type	Tensile Strength Rm (N/mm^2) min.
CU1	370
CU2	410
CU3	500
CU4	550

3.4 Macroscopic examination

Three test specimens are to be prepared and etched on one side to clearly reveal the weld metal, the fusion line and the heat affected zone (see Fig. 9).

A suitable etchant for this purpose is:

5 g iron (III) chloride
30 ml hydrochloric acid (cone)
100 ml water.

The test specimens are to be examined for imperfections present in the weld metal and the heat affected zone. Cracks and lack of fusion are not permitted. Imperfections such as pores, or slag inclusions, greater than 3 mm are not permitted.

3.5 Re-testing

If the test piece fails to comply with any of the requirements of this Appendix, reference is made to re-test procedures given in UR W28.

4. Test record

4.1 Welding conditions for test assemblies and test results are to be recorded in welding procedure qualification record. Forms of welding procedure qualification records can be taken from the Society's rules or from relevant standards.

4.2 A statement of the results of assessing each test piece, including repeat tests, is to be made for each welding procedure qualification records. The relevant items listed for the WPS are to be included.

W24 (cont)

4.3 The welding procedure qualification record is to be signed by the Surveyor witnessing the test and is to include the Society´s identification.

5. Range of approval

5.1 General

All the conditions of validity stated below are to be met independently of each other. Changes outside of the ranges specified are to require a new welding procedure test.

A qualification of a WPS obtained by a manufacturer is valid for welding in workshops or sites under the same technical and quality control of that manufacturer.

5.2 Base metal

The range of qualification related to base metal is given in Table A.3.

Table A.3 Range of qualification for base metal

Copper alloy material grade used for qualification	Range of approval
CU1	CU1
CU2	CU1; CU2
CU3	CU3
CU4	CU4

5.3 Thickness

The qualification of a WPS carried out on a weld assembly of thickness t is valid for the thickness range given in Table A.4.

Table A.4 Range of qualification for thickness

Thickness of the test piece, t (mm)	Range of approval
30≤ t	≥3 mm

5.4 Welding position

Approval for a test made in any position is restricted to that position.

5.5 Welding process

5.5.1 The approval is only valid for the welding process used in the welding procedure test. Single run is not qualified by multi-run butt weld test used in this UR.

W24 (cont)

5.6 Filler metal

The approval is only valid for the filler metal used in the welding procedure test.

5.7 Heat input

The upper limit of heat input approved is 25% greater than that used in welding the test piece. The lower limit of heat input approved is 25% lower than that used in welding the test piece.

5.8 Preheating and interpass temperature

The minimum preheating temperature is not to be less than that used in the qualification test. The maximum interpass temperature is not to be higher than that used in the qualification test.

5.9 Post-weld heat treatment

The heat treatment used in the qualification test is to be specified in pWPS. Soaking time may be adjusted as a function of thickness.

End of Document

W25 Aluminium Alloys for Hull Construction and Marine Structure

(May 1998) (Rev.1 May 2004) (Rev.2 Dec 2004) (Rev.3 May 2006) (Rev.4 Dec 2011) (Rev.5 June 2014) (Rev.6 Sep 2021)

1. SCOPE

1.1 These Requirements apply to wrought aluminium alloys used in the construction of hulls, superstructures and other marine structures.
They are not applicable to the use of aluminium alloys at low temperature for cryogenic applications.

1.2 These Requirements are applicable to wrought aluminium alloy products within a thickness range of 3 mm and 50 mm inclusive.
The application of aluminium alloys products outside this thickness range requires prior agreement of the Classification Society.

1.3 The numerical designation (grade) of aluminium alloys and the temper designation are based on those of the Aluminium Association.

1.4 Temper conditions (delivery heat treatment) are defined in the European Standard EN 515:2017 or ANSI H35.1:2017.

1.5 Consideration may be given to aluminium alloys not specified in these Requirements, and to alternative temper conditions, subject to prior agreement with the Classification Society further to a detailed study of their properties, including corrosion resistance, and of their conditions of use (in particular welding procedures).

Note:

1. Rev.4 of this UR is to be uniformly implemented by IACS Societies on ships contracted for construction on or after 1 January 2013 and when the application for certification of materials is dated on or after 1 January 2013.

2. Rev.5 of this UR is to be uniformly implemented by IACS Societies on ships contracted for construction on or after 1 July 2015 and when the application for certification of materials is dated on or after 1 July 2015.

3. Changes introduced in Rev.6 are to be uniformly implemented by IACS Societies on ships contracted for construction on or after 1 January 2023, or when the application for certification of steel products is dated on or after 1 January 2023, or the application for certification of manufacturer approval is dated on or after 1 January 2023.

4. The “contracted for construction” date means the date on which the contract to build the vessel is signed between the prospective owner and the shipbuilder. For further details regarding the date of “contract for construction”, refer to IACS Procedural Requirement (PR)No. 29.

W25
(cont'd)

2. APPROVAL

2.1 All materials, including semi finished products, are to be manufactured at works which are approved by the Classification Society for the grades of aluminium alloy supplied.

3. ALUMINIUM ALLOYS AND THEIR TEMPER CONDITIONS

3.1 Rolled products (sheets, strips and plates)
The following aluminium alloys are covered by these Requirements:

5083, 5086, 5383, 5059, 5754, 5456

with the hereunder temper conditions:

O, H111, H112, H116, H321

3.2 Extruded products (sections, shapes, bars and closed profiles)

The following aluminium alloys are covered by these Requirements:

5083, 5383, 5059, 5086

with the hereunder temper conditions:

O, H111, H112,

and:

6005A, 6061, 6082

with the hereunder temper conditions:

T5 or T6.

Note: The alloy grades 6005A, 6061 of the 6000 series should not be used in direct contact with sea water unless protected by anodes and/or paint system.

4. CHEMICAL COMPOSITION

4.1 The Manufacturer is to determine the chemical composition of each cast.

4.2 The chemical composition of aluminium alloys is to comply with the requirements given in Table 1.

4.3 The Manufacturer's declared analysis will be accepted subject to occasional checks if required by the Surveyor; in particular, product analysis may be required where the final product chemistry is not well represented by the analysis from the cast.

4.4 When the aluminium alloys are not cast in the same works in which they are manufactured into semi finished products, the Society Surveyor shall be given a certificate issued by the works in question which indicates the reference numbers and chemical composition of the heats.

W25
(cont'd)

5. MECHANICAL PROPERTIES

5. 1 The mechanical properties are to comply with the requirements given in Tables 2 and 3.

Note: It should be recognized that the mechanical properties of the welded joint are lower for strain hardened or heat treated alloys, when compared with those of the base material, in general. For reference, see the UR for Aluminium Consumables.

6. FREEDOM OF DEFECTS

6.1 The finished material is to have a workmanlike finish and is to be free from internal and surface defects prejudicial to the use of the concerned material for the intended application.

6.2 Slight surface imperfections may be removed by smooth grinding or machining as long as the thickness of the material remains within the tolerances given in Section 7.

7. TOLERANCES

7.1 The underthickness tolerances for rolled products given in Table 4 are minimum requirements.

7.2 The underthickness tolerances for extruded products are to be in accordance with the requirements of recognized international or national standards.

7.3 Dimensional tolerances other than underthickness tolerances are to comply with a recognized national or international standard.

8. TESTING AND INSPECTION

8.1 **Tensile test**
The test specimens and procedures are to be in accordance with UR W2.

8.2 **Non-destructive examination.**
In general, the non-destructive examination of material is not required for acceptance purposes.

Note: Manufacturers are expected, however, to employ suitable methods of non-destructive examination for the general maintenance of quality standards.

8.3 **Dimensions**
It is the manufacturer's responsibility to check the materials for compliance with the tolerances given in Section 7.

8.4 **Verification of proper fusion of press welds for closed profiles.**

8.4.1 The Manufacturer has to demonstrate by macrosection tests or drift expansion tests of closed profiles performed on each batch of closed profiles that there is no lack of fusion at the press welds.

8.4.2 Drift expansion tests

8.4.2.1 Every fifth profile shall be sampled after final heat treatment.
Batches of five profiles or less shall be sampled one profile.

Profiles with lengths exceeding 6 m shall be sampled every profile in the start of the production. The number of tests may be reduced to every fifth profile if the results from the first 3-5 profiles are found acceptable.

8.4.2.2 Each profile sampled will have two samples cut from the front and back end of the production profile.

8.4.2.3 The test specimens are to be cut with the ends perpendicular to the axis of the profile. The edges of the end may be rounded by filing.

8.4.2.4 The length of the specimen is to be in accordance with UR W2.

8.4.2.5 Testing is to be carried out at ambient temperature and is to consist of expanding the end of the profile by means of a hardened conical steel mandrel having an included angle of at least 60°.

8.4.2.6 The sample is considered to be unacceptable if the sample fails with a clean split along the weld line which confirms lack of fusion.

8.5 Corrosion testing

8.5.1 Rolled 5xxx-alloys of type 5083, 5383, 5059, 5086 and 5456 in the H116 and H321 tempers intended for use in marine hull construction or in marine applications where frequent direct contact with seawater is expected are to be corrosion tested with respect to exfoliation and intergranular corrosion resistance.

8.5.2 The manufacturers shall establish the relationship between microstructure and resistance to corrosion when the above alloys are approved. A reference photomicrograph taken at 500x, under the conditions specified in ASTM B928:2015, Section 9.4.1, shall be established for each of the alloy-tempers and thickness ranges relevant. The reference photographs shall be taken from samples which have exhibited no evidence of exfoliation corrosion and a pitting rating of PB or better, when subjected to the test described in ASTM G66:2018 (ASSET).The samples shall also have exhibited resistance to intergranular corrosion at a mass loss no greater than 15mg/cm^2, when subjected to the test described in ASTM G67:2018 (NAMLT). Upon satisfactory establishment of the relationship between microstructure and resistance to corrosion, the master photomicrographs and the results of the corrosion tests are to be approved by the Classification Society. Production practices shall not be changed after approval of the reference micrographs.

Other test methods may also be accepted at the discretion of the Classification Society.

8.5.3 For batch acceptance of 5xxx-alloys in the H116 and H321 tempers, metallographic examination of one sample selected from mid width at one end of a coil or random sheet or plate is to be carried out. The microstructure of the sample is to be compared to the reference photomicrograph of acceptable material in the presence of the Surveyor. A longitudinal section perpendicular to the rolled surface shall be prepared for metallographic examination, under the conditions specified in ASTM B928:2015, Section 9.6.1. If the microstructure shows evidence of continuous grain boundary network of aluminium-magnesium precipitate in excess of the reference photomicrographs of acceptable material, the batch is either to be rejected or tested for exfoliation-corrosion resistance and intergranular corrosion resistance subject to the agreement of the Surveyor. The corrosion tests are to be in accordance with ASTM G66:2018 and ASTM G67:2018 or equivalent standards. Acceptance criteria

are that the sample shall exhibit no evidence of exfoliation corrosion and a pitting rating of PB or better when test subjected to ASTM G66:2018 ASSET test, and the sample shall exhibit resistance to intergranular corrosion at a mass loss no greater than 15mg/cm^2 when subjected to ASTM G67:2018 NAMLT test. If the results from testing satisfy the acceptance criteria stated in paragraph 8.5.2 the batch is accepted, else it is to be rejected.

As an alternative to metallographic examination, each batch may be tested for exfoliation-corrosion resistance and intergranular corrosion resistance, in accordance with ASTM G66:2018 and ASTM G67:2018 under the conditions specified in ASTM B928:2015, or equivalent standards. If this alternative is used, then the results of the test must satisfy the acceptance criteria stated in paragraph 8.5.3.

9. TEST MATERIALS

9.1 Definition of batches
Each batch is made up of products:
- of the same alloy grade and from the same cast
- of the same product form and similar dimensions (for plates, the same thickness)
- manufactured by the same process
- having been submitted simultaneously to the same temper condition.

9.2 The test samples are to be taken
- at one third of the width from a longitudinal edge of rolled products.
- in the range 1/3 to 1/2 of the distance from the edge to the centre of the thickest part of extruded products.

9.3 Test samples are to be taken so that the orientation of test specimens is as follows:

a) Rolled products

Normally, tests in the transverse direction are required. If the width is insufficient to obtain transverse test specimen, or in the case of strain hardening alloys, tests in the longitudinal direction will be permitted.

b) Extruded products

The extruded products are tested in longitudinal direction.

9.4 After removal of test samples, each test specimen is to be marked in order that its original identity, location and orientation is maintained.

10. MECHANICAL TEST SPECIMENS

10.1 Type and location of tensile test specimen

The type and location of tensile test specimens are to be in accordance with UR W2.

11. NUMBER OF TEST SPECIMENS

11.1 Tensile test

a) Rolled products

One tensile test specimen is to be taken from each batch of the product. If the weight of one batch exceeds 2000 kg, one extra tensile test specimen is to be taken from every 2000 kg of the product or fraction thereof, in each batch.

For single plates or for coils weighting more than 2000 kg each, only one tensile test specimen per plate or coil shall be taken.

b) Extruded products

For the products with a nominal weight of less than 1 kg/m, one tensile test specimen is to be taken from each 1000 kg, or fraction thereof, in each batch. For nominal weights between 1 and 5 kg/m, one tensile test specimen is to be taken from each 2000 kg or fraction hereof, in each batch. If the nominal weight exceeds 5 kg/m, one tensile test specimen is to be taken for each 3000 kg of the product or fraction thereof, in each batch.

11.2 Verification of proper fusion of press welds

For closed profiles, verification of proper fusion of press welds is to be performed on each batch as indicated in 8.4 above.

11.3 Corrosion tests

For rolled plates of grade 5083, 5383, 5059, 5086 and 5456 delivered in the tempers H116 or H321, one sample is to be tested per batch.

12. RETEST PROCEDURES

12.1 When the tensile test from the first piece selected in accordance with Section 11 fails to meet the requirements, two further tensile tests may be made from the same piece. If both of these additional tests are satisfactory, this piece and the remaining pieces from the same batch may be accepted.

12.2 If one or both the additional tests referred to above are unsatisfactory, the piece is to be rejected, but the remaining material from the same batch may be accepted provided that two of the remaining pieces in the batch selected in the same way, are tested with satisfactory results. If unsatisfactory results are obtained from either of these two pieces then the batch of material is to be rejected.

12.3 In the event of any material bearing the Classification Society's brand failing to comply with the test requirements, the brand is to be unmistakably defaced by the manufacturer.

13. BRANDING

13.1 The manufacturer shall mark each product at least one place with the following details:

a) Manufacturer's mark
b) Abbreviated designation of aluminium alloy according to Section 3
c) Abbreviated designation of temper condition according to Section 3
d) Tempers that are corrosion tested in accordance with section 8.5 are to be marked "M" after the temper condition, e.g. 5083 H321 M.
e) Number of the manufacturing batch enabling the manufacturing process to be traced back.

W25
(cont'd)

13.2 The product is also to bear the Classification Society's brand.

13.3 When extruded products are bundled together or packed in crates for delivery, the marking specified in para 13.1 should be affixed by a securely fastened tag or label.

14. DOCUMENTATION

14.1 For each tested batch, the manufacturer must supply to the Classification Society's Surveyor a test certificate, or a shipping statement containing the following details :

a) Purchaser and order number
b) Construction project number, when known,
c) Number, dimensions and weight of the product
d) Designation of the aluminium alloy (grade) and of its temper condition (delivery heat treatment)
e) Chemical composition
f) Manufacturing batch number or identifying mark
g) Mechanical Test results
h) Corrosion Test results (if any).

Table 1 Chemical composition [1)]

Grade	Si	Fe	Cu	Mn	Mg	Cr	Zn	Ti	Other elements [2)]	
									Each	Total
5083	0.40	0.40	0.10	0.40-1.0	4.0-4.9	0.05-0.25	0.25	0.15	0.05	0.15
5383	0.25	0.25	0.20	0.7-1.0	4.0-5.2	0.25	0.40	0.15	0.05 [5)]	0.15 [5)]
5059	0.45	0.50	0.25	0.6-1.2	5.0-6.0	0.25	0.40-0.90	0.20	0.05 [6)]	0.15 [6)]
5086	0.40	0.50	0.10	0.20-0.7	3.5-4.5	0.05-0.25	0.25	0.15	0.05	0.15
5754	0.40	0.40	0.10	0.50 [3)]	2.6-3.6	0.30 [3)]	0.20	0.15	0.05	0.15
5456	0.25	0.40	0.10	0.50-1.0	4.7-5.5	0.05-0.20	0.25	0.20	0.05	0.15
6005A	0.50-0.9	0.35	0.30	0.50 [4)]	0.40-0.7	0.30 [4)]	0.20	0.10	0.05	0.15
6061	0.40-0.8	0.7	0.15-0.40	0.15	0.8-1.2	0.04-0.35	0.25	0.15	0.05	0.15
6082	0.7-1.3	0.50	0.10	0.40-1.0	0.6-1.2	0.25	0.20	0.10	0.05	0.15

Notes:
[1)] Composition in percentage mass by mass maximum unless shown as a range or as a minimum.
[2)] Includes Ni, Ga, V and listed elements for which no specific limit is shown. Regular analysis need not be made.
[3)] Mn + Cr: 0.10-0.60
[4)] Mn + Cr: 0.12-0.50
[5)] Zr: maximum 0.20. The total for other elements does not include Zirconium.
[6)] Zr: 0.05-0.25. The total for other elements does not include Zirconium.

W25
(cont'd)

Table 2 Mechanical properties for rolled products, 3 mm ≤ t ≤ 50 mm

Grade	Temper condition[3)]	Thickness, t	Yield Strength $R_{p0.2}$ min. or range N/mm²	Tensile Strength R_m min. or range N/mm²	Elongation, % min. [1)]	
					$A_{50\ mm}$	A_{5d}
5083	O	3 ≤ t ≤ 50 mm	125	275-350	16	14
	H111	3 ≤ t ≤ 50 mm	125	275-350	16	14
	H112	3 ≤ t ≤ 50 mm	125	275	12	10
	H116	3 ≤ t ≤ 50 mm	215	305	10	10
	H321	3 ≤ t ≤ 50 mm	215-295	305-385	12	10
5383	O	3 ≤ t ≤ 50 mm	145	290	-	17
	H111	3 ≤ t ≤ 50 mm	145	290	-	17
	H116	3 ≤ t ≤ 50 mm	220	305	10	10
	H321	3 ≤ t ≤ 50 mm	220	305	10	10
5059	O	3 ≤ t ≤ 50 mm	160	330	24	24
	H111	3 ≤ t ≤ 50 mm	160	330	24	24
	H116	3 ≤ t ≤ 20 mm	270	370	10	10
		20 < t ≤ 50 mm	260	360	-	10
	H321	3 ≤ t ≤ 20 mm	270	370	10	10
		20 < t ≤ 50 mm	260	360	-	10
5086	O	3 ≤ t ≤ 50 mm	95	240-305	16	14
	H111	3 ≤ t ≤ 50 mm	95	240-305	16	14
	H112	3 ≤ t ≤ 12.5 mm	125	250	8	-
		12.5 < t ≤ 50 mm	105	240	-	9
	H116	3 ≤ t ≤ 50 mm	195	275	10[2)]	9
5754	O	3 ≤ t ≤ 50 mm	80	190-240	18	17
	H111	3 ≤ t ≤ 50 mm	80	190-240	18	17
5456	O	3 ≤ t ≤ 6.3 mm	130-205	290-365	16	
		6.3 < t ≤ 50 mm	125-205	285-360	16	14
	H116	3 ≤ t ≤ 30 mm	230	315	10	10
		30 < t ≤ 40 mm	215	305	-	10
		40 < t ≤ 50 mm	200	285	-	10
	H321	3 ≤ t ≤ 12.5 mm	230-315	315-405	12	-
		12.5 < t ≤ 40 mm	215-305	305-385	-	10
		40 < t ≤ 50 mm	200-295	285-370	-	10

Notes:
[1)] Elongation in 50 mm apply for thicknesses up to and including 12.5 mm and in 5d for thicknesses over 12.5 mm.
[2)] 8 % for thicknesses up to and including 6.3 mm.
[3)] The mechanical properties for the O and H111 tempers are the same. However, they are separated to discourage dual certification as these tempers represent different processing.

W25
(cont'd)

Table 3: Mechanical properties for extruded products, 3 mm ≤ t ≤ 50 mm

Grade	Temper	Thickness, t	Yield Strength $R_{p0.2}$ min. N/mm^2	Tensile Strength R_m min. or range N/mm^2	Elongation, % min. 1)2)	
					$A_{50\ mm}$	A_{5d}
5083	O	3 ≤ t ≤ 50 mm	110	270-350	14	12
	H111	3 ≤ t ≤ 50 mm	165	275	12	10
	H112	3 ≤ t ≤ 50 mm	110	270	12	10
5383	O	3 ≤ t ≤ 50 mm	145	290	17	17
	H111	3 ≤ t ≤ 50 mm	145	290	17	17
	H112	3 ≤ t ≤ 50 mm	190	310		13
5059	H112	3 ≤ t ≤ 50 mm	200	330		10
5086	O	3 ≤ t ≤ 50 mm	95	240-315	14	12
	H111	3 ≤ t ≤ 50 mm	145	250	12	10
	H112	3 ≤ t ≤ 50 mm	95	240	12	10
6005A	T5	3 ≤ t ≤ 50 mm	215	260	9	8
	T6	3 ≤ t ≤ 10 mm	215	260	8	6
		10 < t ≤ 50 mm	200	250	8	6
6061	T6	3 ≤ t ≤ 50 mm	240	260	10	8
6082	T5	3 ≤ t ≤ 50 mm	230	270	8	6
	T6	3 ≤ t ≤ 5 mm	250	290	6	
		5 < t ≤ 50 mm	260	310	10	8

Notes:

1) The values are applicable for longitudinal and transverse tensile test specimens as well.

2) Elongation in 50 mm applies for thicknesses up to and including 12.5 mm and in 5d for thicknesses over 12.5 mm.

Table 4: Underthickness tolerances for rolled products

Nominal thickness (t), mm	Thickness tolerances for nominal width (w), mm		
	w ≤ 1500	1500 < w ≤ 2000	2000 < w ≤ 3500
3.0 ≤ t < 4.0	0.10	0.15	0.15
4.0 ≤ t < 8.0	0.20	0.20	0.25
8.0 ≤ t < 12.0	0.25	0.25	0.25
12.0 ≤ t < 20.0	0.35	0.40	0.50
20.0 ≤ t < 50.0	0.45	0.50	0.65

End of Document

W26 Requirements for Welding Consumables for Aluminium Alloys

(July 1999)
(Rev.1 June 2005)
(Rev.2 Sep 2021)

1. General

1.1 Scope

1.1.1 These requirements give the conditions of approval and inspection of welding consumables to be used for hull construction and marine structure aluminium alloys according to UR W 25. Where no special requirements are given herein, e.g. for the approval procedure or for the welding of test assemblies and testing, those of UR W 17 apply in analogous manner.

1.1.2 The welding consumables preferably to be used for the aluminium alloys concerned are divided into two categories as follows:

- W = wire electrode - and wire - gas combinations for
  metal-arc inert gas welding (MIG, 131 acc. to ISO 4063:2009),
  tungsten inert gas arc welding (TIG, 141) or
  plasma arc welding (15)

- R = rod - gas combinations for tungsten inert gas arc welding (TIG, 141) or
  plasma arc welding (15)

Note:

1. Rev.2 of this UR is to be uniformly implemented by IACS Societies when an application for approval is dated on after 1 January 2023.

W26 (cont)

1.2 Grading, Designation

1.2.1 The consumables concerned are graded as mentioned in Table 1, in accordance with the alloy type and strength level of the base materials used for the approval tests.

Table 1 Consumable grades and base materials for the approval test

Consumable quality grade (Symbol)	Alloy	
	Numerica	Chem. symbol
RA/WA	**5754**	AlMg3
RB/WB	**5086**	AlMg4
RC/WC	**5083**	AlMg4.5Mn0,7
	5383	AlMg4.5Mn0.9
	5456	AlMg5
	5059	-
RD/WD	**6005A**	AlSiMg(A)
	6061	AlMg1SiCu
	6082	AlSi1MgMn
Note: Approval on higher strength AlMg base materials covers also the lower strength AlMg grades and their combination with AlSi grades		

1.2.2 Approval of a wire or a rod will be granted in conjunction with a specific shielding gas acc. to Table 2 or defined in terms of composition and purity of “special” gas to be designated with group sign “S”. The composition of the shielding gas is to be reported. The approval of a wire or rod with any particular gas can be applied or transferred to any combination of the same wire or rod and any gas in the same numbered group as defined in Table 2, subject to the agreement of the Society.

Table 2 Compositional limits of shielding gases and mixtures to be used

Group	Gas composition (Vol. %) [1]	
	Argon	Helium
I - 1	100	---
I - 2	---	100
I - 3	Rest	> 0 to 33
I - 4	Rest	> 33 to 66
I - 5	Rest	> 66 to 95
S	Special gas, composition to be specified, see 1.2.2	

[1] Gases of other chemical composition (mixed gases) may be considered as „special gases“ and covered by a separate test.

W26 (cont)

1.3 Manufacture, testing and approval procedure

1.3.1 Manufacturer's plant, production methods and quality control measures shall be such as to ensure reasonable uniformity in manufacture, see also UR W 17.

1.3.2 Testing and approval procedure shall be in accordance with UR W 17, sections 2 and 3 and as required in UR W 17 for the individual categories (types) of welding consumables, shielding gases and their mixtures mentioned in 1.1.2 above.

2. Testing, required properties

2.1 Testing of the deposited weld metal

2.1.1 For the testing of the chemical composition of the deposited weld metal, a test piece according to Figure 1 shall be prepared. The size depends on the type of the welding consumable (and on the welding process) and shall give a sufficient amount of pure weld metal for chemical analysis. The base metal used shall be compatible with the weld metal in respect of chemical composition.

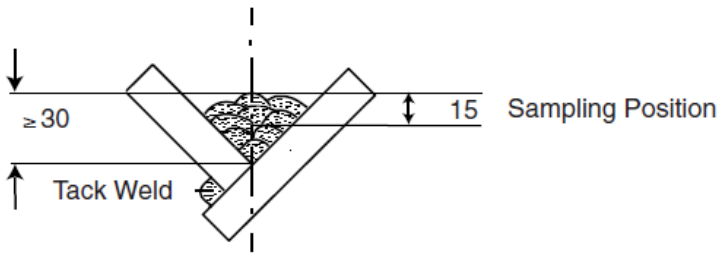

Figure 1 Deposited weld metal test asembly

2.1.2 The chemical composition of the deposited weld metal shall be determined and certified in a manner analogous to that prescribed in UR W 17, section 6.2.3. The results of the analysis shall not exceed the limit values specified by the manufacturer.

2.2 Testing of butt weld assemblies

2.2.1 The testing of the welded joints shall be performed on butt-weld test assemblies according to Figure 2 and Figure 3, made from materials as given in Table 1, in an analogous manner to UR W 17, sections 4.3, 6.2.5, 6.3.5 or 6.4.2 respectively.

2.2.2 Butt weld test assemblies according to Figure 2 with a thickness of 10 to 12 mm are to be prepared for each welding position (downhand, horizontal-vertical, vertical-upward and overhead) for which the consumable is recommended by the manufacturer; except that consumables satisfying the requirements for downhand and vertical-upward positions will be considered as also complying with the requirements for the horizontal-vertical position subject to the agreement of the Society.

2.2.3 Additionally one test assembly according to Figure 3 with a thickness of 20 to 25 mm is to be welded in the downhand position only.

T = Flat tensile test specimen
BC = Face bend test specimen
BR = Root bend test specimen
M = Macrographic section

W26
(cont)

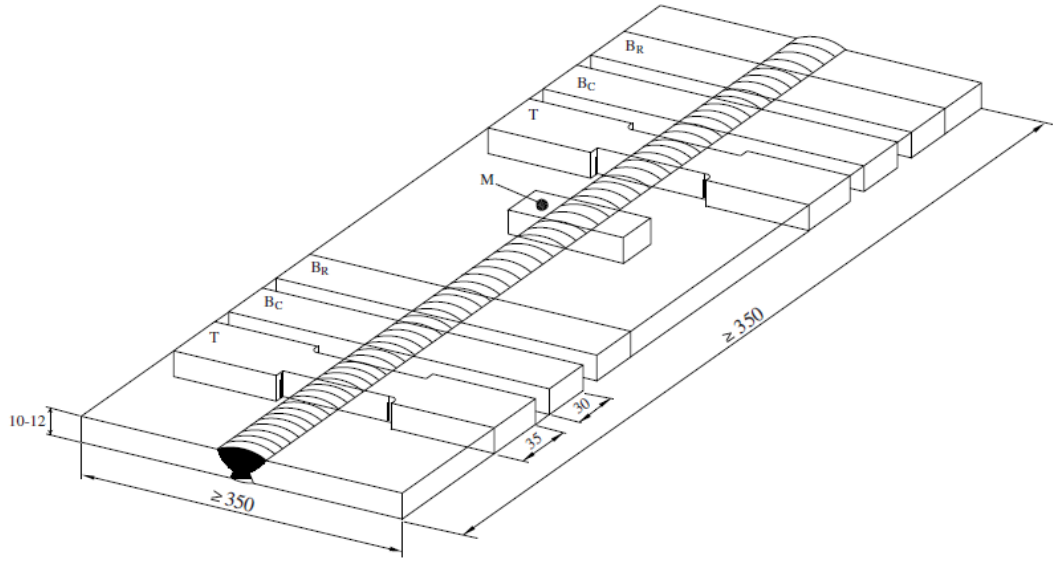

Notes: 1) Edge preparation is to be single V or double V with 70° angle.
2) Back sealing runs are allowed in single V weld assemblies.
3) In case of double V assembly both sides shall be welded in the same welding position.

Figure 2 Butt weld test assembly for positional welding

T = Flat tensile test specimen
BC = Face bend test specimen
BR = Root bend test specimen
M = Macrographic section

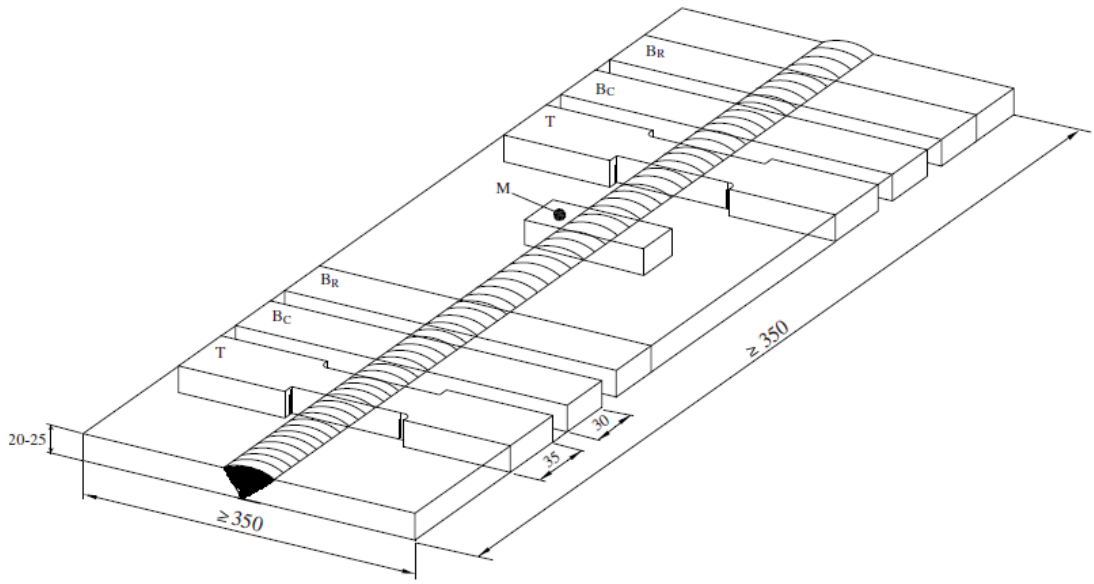

Notes: 1) Edge preparation is to be a single V with 70° angle.
2) Back sealing runs are allowed.

Figure 3 Additional butt weld test assembly in downhand position

W26 (cont)

2.2.4 On completion of welding, assemblies must be allowed to cool naturally to ambient temperature. Welded test assemblies and test specimens must not be subjected to any heat treatment.

Grade D assemblies should be allowed to naturally ageing for a minimum period of 72 hours from the completion of welding before testing is carried out.

2.2.5 The test specimens shown in Figure 2 and Figure 3 and described in UR W 17 shall be taken from the butt weld test assemblies.

2.2.6 The mechanical properties must meet the requirements stated in Table 3. The provisions of UR W 17 apply in analogous manner to the performance of the tests, including the requirements regarding the annual repeat tests and retesting. The position of the fractures is to be stated in the report. The macrographic specimen shall be examined for imperfections such as lack of fusion, cavities, inclusions, pores or cracks.

W26 (cont)

Table 3 Requirements for the transverse tensile and bend tests

Grade	Base material used for the test	Tensile strength R_m [N/mm^2] min.	Former diameter	Bending angle[1)] [°] min.
RA/WA	5754	190	3t	180
RB/WB	5086	240	6t	
RC/WC	5083	275	6t	
	5383 or 5456	290	6t	
	5059	330	6t	
RD/WD	6061. 6005A or 6082	170	6t	

Note: [1)] During testing, the test specimen shall not reveal any one single flaw greater than 3 mm in any direction. Flaws apprearing at the corners of a test specimen shall be ignored in the evaluation, unless there is evidence that they result from lack of fusion.

3. Annual repeat tests

3.1 The annual repeat tests shall entail the preparation and testing of the deposited weld metal test assembly as prescribed under 2.1.1 (Figure 1) and of the downhand butt weld test assembly according to 2.2.2 (Figure 2).

End of Document

W27 Cast Steel Propellers

(May 2000)
(Rev.1 May 2004)
(Rev.2 July 2020)
(Corr.1 Sep 2020)
(Rev.3 Sep 2023)

1. Scope

1.1 These unified requirements are applicable to the manufacture, inspection and repair procedures of cast steel propellers, blades and bosses.

1.2 Where the use of alternative alloys is proposed, particulars of chemical composition, mechanical properties and heat treatment are to be submitted for approval.

1.3 These requirements may also be used for the repair of propellers damaged in service, subject to prior agreement with the Classification Society.

Notes:

1. Changes introduced in Rev.2 are to be uniformly implemented by IACS Societies on ships contracted for construction on or after 1 July 2021, or when the application for certification of cast steel propellers is dated on or after 1 July 2021, or the application for certification of manufacturer approval is dated on or after 1 July 2021.

2. Changes introduced in Rev.3 are to be uniformly implemented by IACS Societies on ships contracted for construction on or after 1 January 2025, or when the application for certification of cast steel propellers is dated on or after 1 January 2025, or the application for certification of manufacturer approval is dated on or after 1 January 2025.

3. The “contracted for construction” date means the date on which the contract to build the vessel is signed between the prospective owner and the shipbuilder. For further details regarding the date of “contract for construction”, refer to IACS Procedural Requirement (PR) No.29

W27
(cont)

2. Foundry approval

2.1 General

All propellers, blades and bosses are to be manufactured by foundries approved by the Classification Society.The castings-are to be manufactured and tested in accordance with the requirements of these rules.

2.2 Application for approval

It is the manufacturer's responsibility to assure that effective quality, process and production controls during manufacturing are adhered to within the manufacturing specification. The manufacturing specification shall be submitted to the Classification Society at the time of initial approval, and shall at least include the following particulars: description of the foundry facilities, steel material specification, runner and feeder arrangements, manufacturing procedures, non-destructive testing and repair procedures.

2.3 Scope of the approval test

The scope of the approval test is to be agreed with the Classification Society. This should include the presentation of cast test coupons of the propeller materials in question for approval testing in order to verify that the chemical composition and the mechanical properties of these materials comply with these rules.

2.4 Inspection facilities

The foundry is to have an adequately equipped laboratory, manned by experienced personnel, for the testing of moulding materials chemical analyses, mechanical testing, microstructural testing of metallic materials and non-destructive testing. Where testing activities are assigned to other companies or other laboratory, additional information required by the Society is to be included.

3. Quality of castings

3.1 Freedom from defects

All castings are to have a workmanlike finish and are to be free from imperfections defects which would be prejudicial to their proper application in service.

Minor casting defects which may still be visible after machining such as small sand and slag inclusions, small cold shuts and scabs shall be trimmed off by the manufacturer in accordance with W27.11.

3.2 Removal of defects

Casting defects which may impair the serviceability of the castings, e.g. major non-metallic inclusions, shrinkage cavities, blow holes and cracks, are not permitted. They may be removed by one of the methods described in W27.11 and repaired within the limits and restrictions for the severity zones. Full description and documentation must be available for the surveyor.

W27
(cont)

4. Dimensions, dimensional and geometrical tolerances

4.1 The verification of dimensions, the dimensional and geometrical tolerances is the responsibility of the manufacturer.

The report on the relevant examinations is to be submitted to the Surveyor, who may require checks to be made in his presence.

4.2 Static balancing is to be carried out on all propellers in accordance with the approved drawing. Dynamic balancing may be necessary for propellers running above 500 rpm.

5. Chemical composition

5.1 Typical cast steel propeller alloys are grouped into four types depending on their chemical composition as given in Table 1. Cast steel whose chemical composition deviate from the typical values of Table 1 must be specially approved by the Classification Society.

Table 1 - Typical chemical composition for steel propeller castings

Alloy type	C Max. (%)	Mn Max. (%)	Cr (%)	Mo[1)] Max. (%)	Ni (%)
Martensitic (12 Cr 1 Ni)	0,15	2,0	11,5-17,0	0,5	Max. 2,0
Martensitic (13 Cr 4 Ni)	0,06	2,0	11,5-17,0	1,0	3,5-5,0
Martensitic (16 Cr 5 Ni)	0,06	2,0	15,0-17,5	1,5	3,5-6,0
Austenitic (19 Cr 11Ni)	0,12	1,6	16,0-21,0	4,0	8,0-13,0

Note: 1) Minimum values are to be in accordance with recognised national or international standards

5.2 The manufacturer is to maintain records of the chemical analyses of the production casts, which are to be made available to the Surveyor so that he can satisfy himself that the chemical composition of each casting is within the specified limits.

6. Heat treatment

Martensitic castings are to be austenitized and tempered. Austenitic castings should be solution treated.

7. Mechanical properties

7.1 The mechanical properties are to comply with values given in Table 2. These values refer to the test specimens machined from integrally cast test coupons attached to the hub or on the blade. The thickness of test coupon is to be in accordance with a recognized standard.

W27
(cont)

Table 2 – Mechanical Properties for steel propeller castings

Alloy type	Proof stress Rp0.2 min. (N/mm²)	Tensile strength Rm min. (N/mm²)	Elongation A5 min. (%)	Red. of area Z min. (%)	Charpy V-notch[1] Energy min. (J)
12 Cr 1Ni	440	590	15	30	20
13 Cr 4Ni	550	750	15	35	30
16 Cr 5Ni	540	760	15	35	30
19 Cr 11Ni	180[2]	440	30	40	-

[1] Not required for general service and the lowest Ice class notations. For other Ice class notations, tests are to be made at -10°C.

[2] Rp1,0 value is 205 N/mm².

7.2 Where possible, the test coupons attached on blades are to be located in an area between 0.5 to 0.6R, where R is the radius of the propeller.

7.3 The test bars are not to be detached from the casting until the final heat treatment has been carried out. Removal is to be by non-thermal procedures.

7.4 Separately cast test bars may be used subject to prior approval of the Classification Society. The test bars are to be cast from the same heat as the castings represented and heat treated with the castings represented.

7.5 At least one set of mechanical tests is to be made on material representing each casting in accordance with UR W2.

7.6 As an alternative to 7.5, where a number of small propellers of about the same size, and less than 1m in diameter, are made from one cast and heat treated in the same furnace charge, a batch testing procedure may be adopted using separately cast test samples of suitable dimensions. At least one set of mechanical tests is to be provided for each multiple of five castings in the batch.

8. Definition of skew, severity zones

8.1 In order to relate the degree of inspection to the criticality of imperfections in propeller blades and to help reduce the risk of failure by fatigue cracking after repair, propeller blades are divided into three severity zones designated A, B and C. Definition of skew, and, severity zones are given in UR W24.

9. Non-destructive testing

9.1 Qualification of personnel involved in NDT

For the qualification of personnel refer to UR W35

W27 (cont)

9.2 Visual testing

All finished castings are to be 100% visually inspected by the manufacturer. Castings are to be free from cracks, hot tears or other imperfections which, due to their nature, degree or extent, will interfere with the use of the castings. A general visual examination is to be carried out by the Surveyor.

9.3 Liquid penetrant testing

Liquid penetrant testing procedure is to be submitted to the Classification Society and is to be in accordance with ISO 3452-1:2013 or a recognized standard. The acceptance criteria are specified in W27.10.

For all propellers, separately cast blades and hubs, the surfaces covered by severity zones A, B and C are to be liquid penetrant tested. Testing of zone A is to be undertaken in the presence of the Surveyor, whilst testing of zone B and C may be witnessed by the Surveyor upon his request.

If repairs have been made either by grinding or by welding, the repaired areas are additionally to be subjected to the liquid penetrant testing independent of their location and/or severity zone. Weld repairs are, independent of their location, always to be assessed according to zone A.

9.4 Magnetic particle testing

Magnetic particle testing may be used in lieu of liquid penetrant testing for examination of martensitic stainless steels castings.

Magnetic particle testing procedure is to be submitted to the Classification Society and is to be in accordance with ISO 9934-1:2016 or a recognized standard.

9.5 Radiographic and ultrasonic testing

When required by the Classification Society or when deemed necessary by the manufacturer, further non-destructive testing (e.g. radiographic and/or ultrasonic testing) are to be carried out. The acceptance criteria or applied quality levels are then to be agreed between the manufacturer and the Classification Society in accordance with a recognized standard.

Note: due to the attenuating effect of ultrasound within austenitic steel castings, ultrasonic testing may not be practical in some cases, depending on the shape/type/thickness, and grain-growth direction of the casting.

10. Acceptance criteria for liquid penetrant testing and magnetic particle testing

10.1 Definitions of liquid penetrant indications

Indication: In the liquid penetrant testing an indication is the presence of detectable bleed-out of the penetrant liquid from the material discontinuities appearing at least 10 minutes after the developer has been applied.

Relevant indication: only indications which have any dimension greater than 1.5mm shall be considered relevant for the categorization of indications.

W27 (cont)

Non-linear indication: indication having a length less than or equal to three times its width(i.e. $l \leqslant 3\ w$)

Linear indication: indication having a length greater than three times its width (i.e. $l > 3\ w$).

Aligned indications:

a) Non-linear indications form an alignment when the distance between indications is less than 2mm and at least three indications are aligned. An alignment of indications is considered to be a unique indication and its length is equal to the overall length of the alignment.

b) Linear indications form an alignment when the distance between two indications is smaller than the length of the longest indication.

Illustration of liquid penetrant indications is given in Fig. 1.

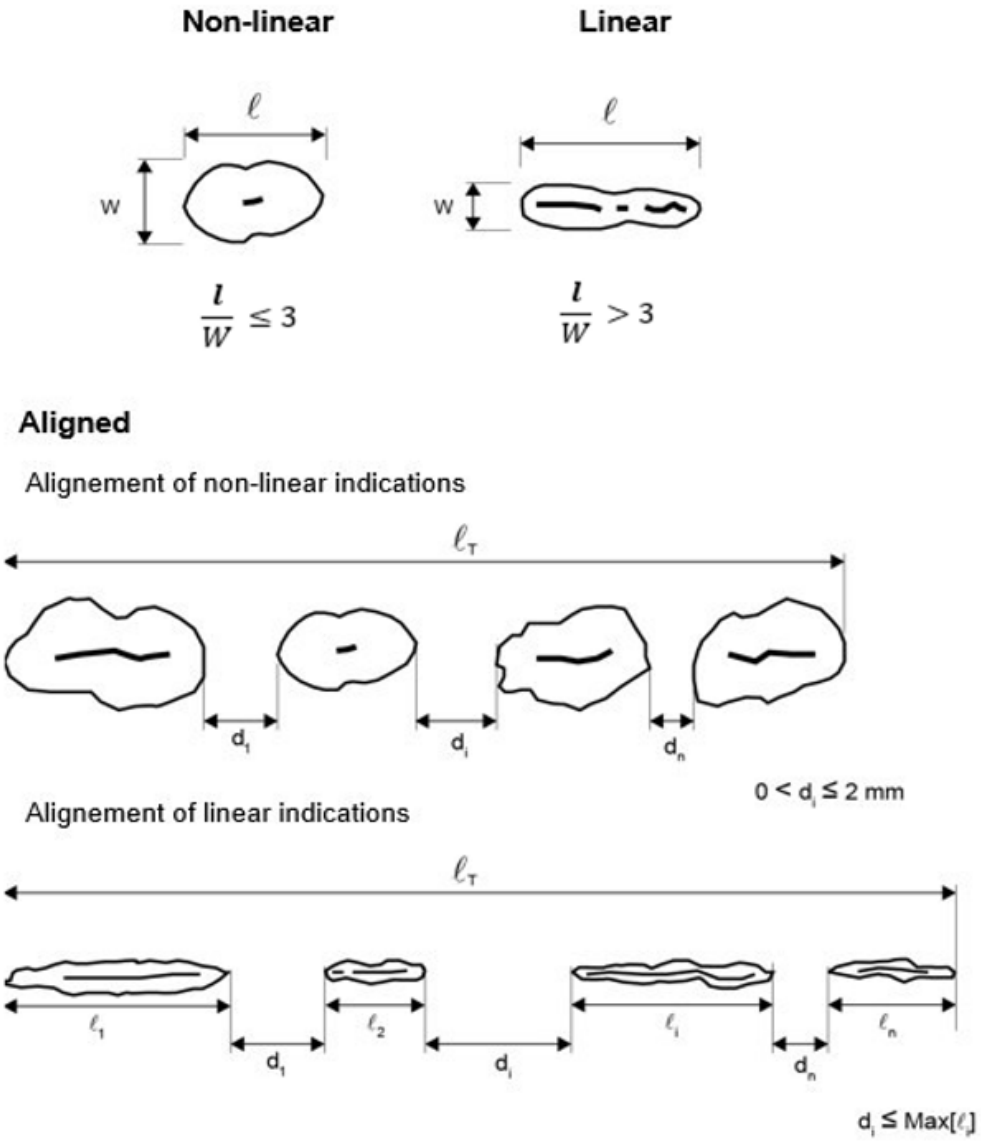

Fig.1 Shape of indications

W27 (cont)

10.2 Acceptance standard

The surface to be inspected is to be divided into reference areas of 100 cm^2. Each reference area may be square or rectangular with the major dimension not exceeding 250mm.

The area shall be taken in the most unfavourable location relative to the indication being evaluated.

The relevant indications detected shall with respect to their size and number, not exceed the values given in the Table 3.

Areas which are prepared for welding are independent of their location always to be assessed according to zone A. The same applies to the welded areas after being finished machined and/or grinded.

Table 3 – Allowable number and size of relevant indications in a reference area of 100 cm², depending on severity zones[1)]

Severity zones	Max. total number of indications	Type of indication	Max. number for each type [1) 2)]	Max. dimension of indication (mm)
A	7	Non-linear	5	4
		Linear	2	3
		Aligned	2	3
B	14	Non-linear	10	6
		Linear	4	6
		Aligned	4	6
C	20	Non-linear	14	8
		Linear	6	6
		Aligned	6	6

[1)] Single non-linear indications less than 2mm in zone A and less than 3mm ~~in~~ for the other zones are not considered relevant.

[2)] The total number of non-linear indications may be increased to the maximum total number, or part thereof, represented by the absence of linear or aligned indications.

11. Repair of defects

11.1 Defective castings are to be repaired in accordance with the requirements given in 11.2 to 11.7 and, where applicable, the requirements of W27.12.

11.2 In general the repairs are to be carried out by mechanical means, e.g. by grinding, chipping or milling. The resulting grooves are to be blended into the surrounding surface so as to avoid any sharp contours. Complete elimination of the defective material is to be verified by liquid penetrant testing, or magnetic particle testing if applicable.

11.3 Weld repairs are to be undertaken only when they are considered to be necessary and have prior approval of the Surveyor.

11.4 The excavations are to be suitably shaped to allow good access for welding. The resulting grooves are to be subsequently ground smooth and complete elimination of the defective material is to be verified by liquid penetrant testing. Welds having an area less than 5cm² are to be avoided.

W27 (cont)

11.5 Grinding in severity zone A may be carried out to an extent that maintains the blade thickness. Repair welding is generally not permitted in severity Zone A and will only be allowed after special consideration by the Classification Society.

11.6 Defects in severity zone B that are not deeper than t/40 mm ("t" is the minimum local thickness according to the Rules) or 2mm, whichever is greatest, are to be removed by grinding. Those defects that are deeper may be repaired by welding subject to prior approval from the Classification Society.

11.7 Repair welding is generally permitted in severity zone C.

11.8 Repair documentation

The foundry is to maintain records of inspections, welding, and any subsequent heat treatment, traceable to each casting.

Before welding is started, full details of the extent and location of the repair, the proposed welding procedure, heat treatment and subsequent inspection procedures are to be submitted to the Classification Society for approval.

12. Welding repair procedure

12.1 Before welding is started, manufacturer shall submit to the Classification Society a detailed welding procedure specification covering the weld preparation, welding parameters, filler metals, preheating and post weld heat treatment and inspection procedures.

12.2 All weld repairs are to be carried out in accordance with qualified procedures, and, by welders who are qualified to a recognized standard. Welding Procedure Qualification Tests are to be carried out in accordance with Appendix A and witnessed by the Surveyor.

Defects to be repaired by welding are to be ground to sound material according to W27.10.

The welding grooves are to be prepared in such a manner which will allow a good fusion of the groove bottom.

The resulting ground areas are to be examined in the presence of the Surveyor by liquid penetrant testing in order to verify the complete elimination of defective material.

12.3 Welding is to be done under controlled conditions free from draughts and adverse weather.

12.4 Metal arc welding with electrodes or filler wire used in the procedure tests is to be used. The welding consumables are to be stored and handled in accordance with the manufacturer s recommendations.

12.5 Slag, undercuts and other imperfections are to be removed before depositing the next run.

12.6 The martensitic steels are to be furnace re-tempered after weld repair. Subject to prior approval, however, local stress relieving may be considered for minor repairs.

12.7 On completion of heat treatment of martensitic steels the weld repairs and adjacent material are to be ground smooth. All weld repairs are to be liquid penetrant tested.

W27
(cont)

13. Identification and marking

13.1 The manufacturer is to adopt a system for the identification of all castings, which enable the material to be traced to its original cast. The Surveyor is to be given full facilities for so tracing the castings when required.

Each finished casting propeller shall be marked by the manufacturer at least with the following particulars:

a) Heat number or other marking which will enable the full history of the casting to be traced;

b) Grade of cast material or corresponding abbreviated designation

c) The Society's certificate number;

d) Ice class symbol, where applicable;

e) Skew angle for high skew propellers,

f) Date of final inspection.

13.2 The Society s stamp is to be put on when the casting has been accepted.

14. Document and certification

14.1 The manufacturer is to provide the Surveyor with an inspection certificate giving the following particulars for each casting which has been accepted:

a) Purchaser s name and order number;

b) Vessel identification, where known;

c) Description of the casting with drawing number;

d) Diameter, number of blades, pitch, direction of turning;

e) Skew angle for high skew propellers;

f) Final weight;

g) Alloy type, heat number and chemical composition;

h) Casting identification number;

i) Details of time and temperature of heat treatment,

j) Results of the mechanical tests,

k) Results of non-destructive tests and details of test procedure where applicable.

W27 (cont)

Appendix A: Welding procedure qualification tests for repair of cast steel propeller

1. General

1.1 This document gives requirements for qualification tests of welding procedures intended for the repair of cast steel propellers.

1.2 For the welding procedure approval the welding procedure qualification tests are to be carried out with satisfactory results. The qualification tests are to be carried out with the same welding process, filler metal, preheating and stress-relieving treatment as those intended applied by the actual repair work. Welding procedure specification is to refer to the test results achieved during welding procedure qualification testing.

1.3 Welding procedures qualified at a manufacturer are valid for welding in workshops under the same technical and quality management.

2. Test piece and welding of sample

2.1 The test assembly, consisting of cast samples, is to be of a size sufficient to ensure a reasonable heat distribution and according to Fig.A.1 with the minimum dimensions:

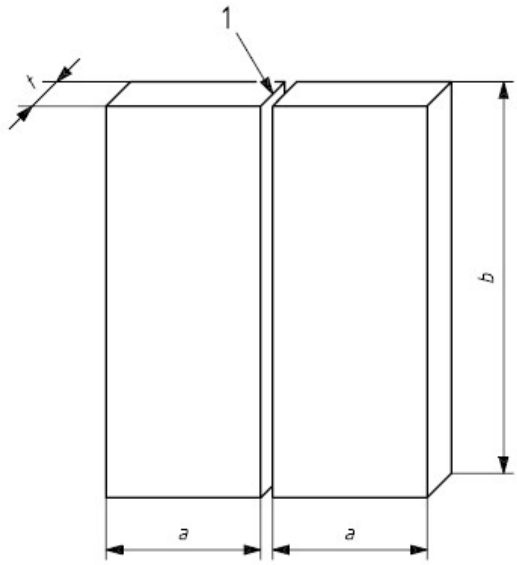

1: Joint preparation and fit-up as detailed in the preliminary Welding Procedure Specification
a: minimum value 150mm
b: minimum value 300mm
t: material thickness

Fig.A.1 Test piece for welding repair procedure

The dimensions and shape of the groove shall be representative of the actual repair work.

2.2 Preparation and welding of test pieces are to be carried out in accordance with the general condition of repair welding work which it represents.

2.3 Welding of the test assemblies and testing of test specimens are to be witnessed by the Surveyor.

W27 (cont)

3. Examinations and tests

3.1 Test assembly is to be examined non-destructively and destructively in accordance with Table A.1 and Fig.A.2:

Table A.1 Type of tests and extent of testing

Type of test	Extent of testing
Visual testing	100% as per article 3.2
Liquid penetrant testing (1)	100% as per article 3.2
Transverse tensile test	Two specimens as per article 3.3
Bend test (2)	Two root and two face specimens as per article 3.4
Macro examination	Three specimens as per article 3.5
Impact test	Two sets of three specimens as per article 3.6
Hardness test	As per article 3.7
(1) Magnetic particle testing may be used in lieu of liquid penetrant testing for martensitic stainless steels. (2) For t≥12mm, the face and root bend may be substituted by 4 side bend test specimens.	

3.2 Non-destructive testing

Test assembly is to be examined by visual and liquid penetrant testing, or magnetic particle testing if applicable, prior to the cutting of test specimen. In case, that any post-weld heat treatment is required or specified, non-destructive testing is to be performed after heat treatment.

No cracks are permitted. Imperfections detected by liquid penetrant testing, or magnetic particle testing if applicable, are to be assessed in accordance with W27.10.

3.3 Tensile test

Two flat transverse tensile test specimens shall be prepared. Testing procedures shall be in accordance with IACS UR W2 2.4.2.8 b). Alternatively tensile test specimens according to recognized standards acceptable to the Classification Society may be used.
The tensile strength shall meet the specified minimum value of the base material. The location of fracture is to be reported, i.e. weld metal, HAZ or base material.

3.4 Bend test

Transverse bend tests for butt joints are to be in accordance with UR W2 ~~Rev.02-2003 2.6~~, or, according to a recognized standard. The mandrel diameter shall be 4 x thickness except for austenitic steels, in which case the mandrel diameter shall be 3 x thickness.

The bending angle is to be 180°. After testing, the test specimens are not to reveal any open defects in any direction greater than 3 mm. Defects appearing at the corners of a test specimen during testing are to be investigated case by case.

W27 (cont)

Two root and two face bend specimens are to be tested. For thickness 12 mm and over, four side bend specimens may alternatively be tested.

3.5 Macro-examination

Two macro-sections shall be prepared and etched on one side to clearly reveal the weld metal, the fusion line, and the heat affected zone. Cracks and lack of fusion are not permitted. Imperfections such as slag inclusions, and pores greater than 3mm are not permitted.

3.6 Impact test

Impact test is required, where the base material is impact tested. Charpy V-notch test specimens shall be in accordance with IACS UR W2. Two sets shall be taken, one set with the notch positioned in the center of the weld and one set with the notch positioned in the HAZ (i.e. the mid-point of the notch shall be at 1mm to 2mm from the fusion line), respectively.

The test temperature, and impact energy shall comply with the requirement specified for the base material.

3.7 Hardness test

The macro-section representing the start of welding shall be used for HV 10 hardness testing. Indentations shall traverse 2mm below the surface. At least three individual indentations are to be made in the weld metal, the HAZ (both sides) and in the base metal (both sides). The values are to be reported for information.

3.8 Re-testing

If the test piece fails to comply with any of the requirements of this Appendix, reference is made to re-test procedures given in UR W28.

W27
(cont)

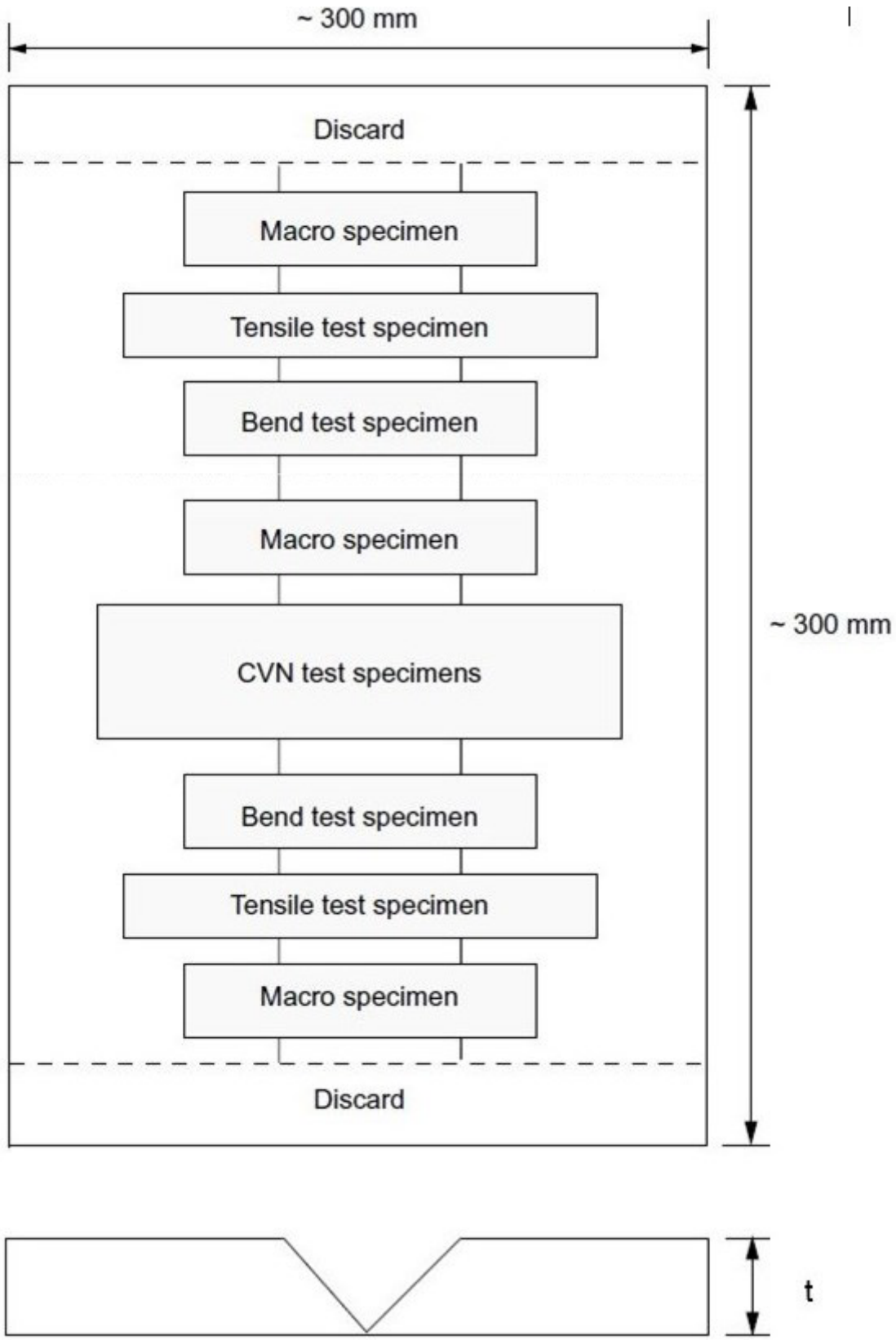

Fig.A.2 Weld test assembly

W27 (cont)

4. Test record

4.1 Welding conditions for test assemblies and test results are to be recorded in welding procedure qualification. Forms of welding procedure qualification records can be taken from the Society's rules or from relevant standards.

4.2 A statement of the results of assessing each test piece, including repeat tests, is to be made for each welding procedure qualification records. The relevant items listed for the WPS are to be included.

4.3 The welding procedure qualification record is to be signed by the Surveyor witnessing the test and is to include the Society´s identification.

5. Range of approval

5.1 General

All the conditions of validity stated below are to be met independently of each other. Changes outside of the ranges specified are to require a new welding procedure test.

A qualification of a WPS obtained by a manufacturer is valid for welding in workshops or sites under the same technical and quality control of that manufacturer.

5.2 Base metal

Range of approval for steel cast propeller is limited to steel grade tested.

5.3 Thickness

The qualification of a WPS carried out on a weld assembly of thickness t is valid for the thickness range given in Table A.2.

Table A.2 Range of qualification for thickness

Thickness of the test piece, t (mm)	Range of approval
15<t≤30	3mm to 2t
t>30	0,5t to 2t or 200mm, whichever is the greater

5.4 Welding position

Approval for a test made in any position is restricted to that position.

5.5 Welding process

5.5.1 The approval is only valid for the welding process used in the welding procedure test. Single run is not qualified by multi-run butt weld test used in this UR.

5.6 Filler metal

The approval is only valid for the filler metal used in the welding procedure test.

5.7 Heat input

W27 (cont)

The upper limit of heat input approved is 15% greater than that used in welding the test piece. The lower limit of heat input approved is 15% lower than that used in welding the test piece.

5.8 Preheating and interpass temperature

The minimum preheating temperature is not to be less than that used in the qualification test. The maximum interpass temperature is not to be higher than that used in the qualification test.

5.9 Post-weld heat treatment

The heat treatment used in the qualification test is to be specified in pWPS. Holding time may be adjusted as a function of thickness.

End of Document

W28 Welding procedure qualification tests of steels for hull construction and marine structures

(June 2005) (Rev.1 Nov 2006) (Rev.2 Mar 2012)

1. Scope

1.1 This document gives requirements for qualification tests of welding procedures intended for the use of weldable steels as specified in UR W7, UR W8, UR W11 and UR W16 for hull construction and marine structures.

1.2 This document specifically excludes the welding procedure specified in UR W1.

1.3 All new welding procedure qualification tests are to be carried out in accordance with this document from 1 July 2007.

1.4 This document does not invalidate welding procedure qualification tests made and accepted by the Classification Society before 1 July 2007 provided the welding procedure qualification tests are considered by the Classification Society to meet the technical intent of this UR or have been qualified in accordance with the recognized standards such as ISO, EN, AWS, JIS or ASME.

2. General

2.1 Welding procedure qualification tests are intended to verify that a manufacturer is adequately qualified to perform welding operations using a particular procedure.

2.2 In general welding procedure tests are to reflect fabrication conditions in respect to welding equipment, inside or outside fabrication, weld preparation, preheating and any post-weld heat treatment. It is to be the manufacturer's responsibility to establish and document whether a procedure is suitable for the particular application.

2.3 For the welding procedure approval the welding procedure qualification test is to be carried out with satisfactory results. Welding procedure specifications are to refer to the test results achieved during welding procedure qualification testing.

2.4 Welding procedures qualified at a manufacturer are valid for welding in workshops under the same technical and quality management.

Note:

1. This UR is to be uniformly implemented by IACS Societies on ships contracted for construction from 1 January 2007 as well as the manufacturing of which is commenced on or after 1 January 2007.

2. The "contracted for construction" date means the date on which the contract to build the vessel is signed between the prospective owner and the shipbuilder. For further details regarding the date of "contract for construction", refer to IACS Procedural Requirement (PR) No. 29.

3. Rev.2 of this UR is to be uniformly implemented by IACS Societies on ships contracted for construction on or after 1 January 2013.

W28
(cont)

3 Welding procedure specification

3.1 Preliminary welding procedure specification and welding procedure specification

3.1.1 A welding procedure specification (WPS) is to be prepared by the shipyard or manufacturer which intends to perform the welding procedure qualification test. This document is also referred to as a preliminary welding procedure specification (pWPS). The pWPS can be modified and amended during procedure tests as deemed necessary however it is to define all relevant variables as mentioned in the WPS (refer to ISO 15614 or other recognized standards).

3.1.2 The shipyard or manufacturer is to submit to the Society a pWPS for review prior to the tests. In case that the test pieces welded according to the pWPS show unacceptable results the pWPS is to be adjusted by the shipyard or manufacturer. The new pWPS is to be prepared and the test pieces welded in accordance with the new pWPS.

3.1.3 The WPS is to be used as a basis for the production welds, and upon satisfactory completion of the tests based on the pWPS, the Society may approve it as a WPS. In case that a WPS is approved by the Society the approval range is to be in compliance with section 5.

4. Qualification of welding procedures

4.1 General

4.1.1 Preparation and welding of test pieces are to be carried out in accordance with the pWPS and under the general condition of production welding which it represents.

4.1.2 Welding of the test assemblies and testing of test specimens are to be witnessed by the Surveyor.

4.1.3 If tack welds and/or start and stop points are a condition of the weld process they are to be fused into the joint and are to be included in the test assemblies.

4.2 Butt weld

4.2.1 Assembly of test pieces

The test assembly is to be of a size sufficient to ensure a reasonable heat distribution and according to Fig. 1 with the minimum dimensions:

- manual or semi-automatic welding:

  width = 2a, a = 3 x t, min 150 mm
  length b = 6 x t, min 350 mm

- automatic welding:

  width = 2a, a = 4 x t, min 200 mm
  length b = 1000 mm

W28
(cont)

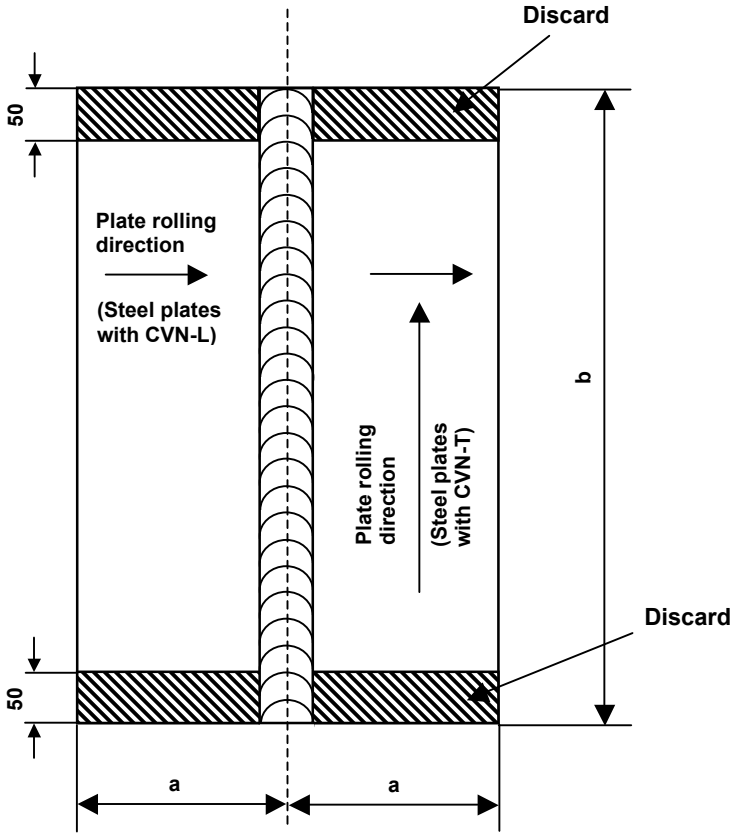

Fig.1 Test assembly for butt weld

For hull structural steel plates impact tested in the longitudinal direction (CVN-L) in UR W11, the butt weld of the test piece is perpendicular to the rolling direction of the two plates.

For high strength quenched and tempered steel plates impact tested in the transverse direction (CVN-T) in UR W16, the butt weld of the test piece is parallel to the rolling direction of the two plates.

4.2.2 Examinations and tests

Test assemblies are to be examined non-destructively and destructively in accordance with the following and Fig 2:

- Visual testing	100 %
- Surface crack detection	100 % (dye penetrant testing or magnetic particle testing)
- Radiographic or Ultrasonic testing	100 %
- Transverse tensile test	two specimens as per 4.2.2.2
- Longitudinal tensile test	required as per 4.2.2.3
- Transverse bend test	four specimens as per 4.2.2.4
- Charpy V-notch impact test	required as per 4.2.2.5
- Macro examination	one specimen as per 4.2.2.6
- Hardness test	required as per 4.2.2.7

W28
(cont)

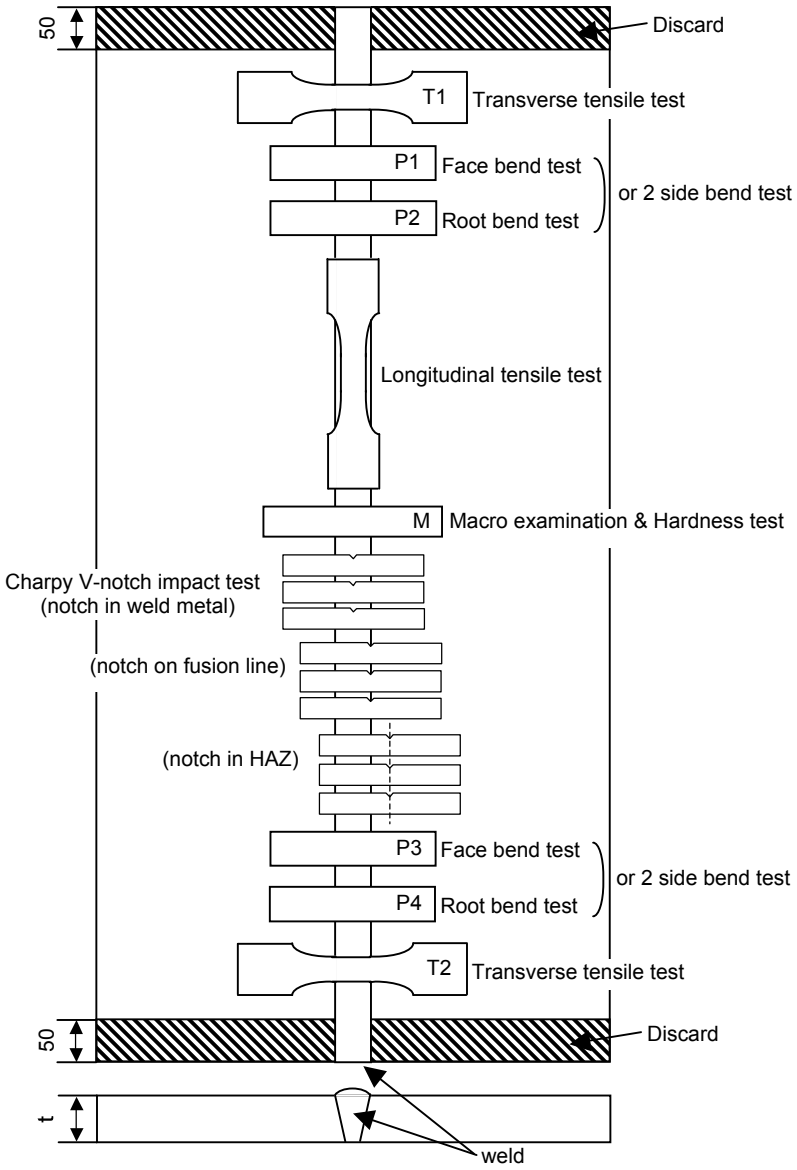

Fig.2 Test sampling

W28 (cont)

4.2.2.1 Non-destructive testing

Test assemblies are to be examined by visual and by non-destructive testing prior to the cutting of test specimen. In case that any post-weld heat treatment is required or specified, non-destructive testing is to be performed after heat treatment. For steels according to UR W16 with specified minimum yield strength of 420 N/mm^2 and above the non-destructive testing is to be delayed for a minimum of 48 hrs, unless heat treatment has been carried out. NDT procedures are to be agreed with the Society.

Imperfections detected by visual or non-destructive testing are to be assessed in accordance with ISO 5817, class B, except for excess weld metal and excess of penetration for which the level C applies.

4.2.2.2 Transverse tensile test

The testing is to be carried out in accordance with UR W2.4. The tensile strength recorded for each specimen is not to be less than the minimum required for the base metal.

When butt welds are made between plates of different grades, the tensile strength to be obtained on the welded assembly is to be in accordance with the requirements relating to the steel grade having lower strength.

4.2.2.3 Longitudinal tensile test

Longitudinal tensile test of deposited weld metal taken lengthways from the weld is required for cases where the welding consumable is not approved by the Society.

The testing is to be carried out in accordance with UR W2.4. The tensile properties recorded for each specimen are not to be less than the minimum required for the approval of the appropriate grade of consumable.

Where more than one welding process or type of consumable has been used to make the test weld, test specimens are to be taken from the area of the weld where each was used with the exception of those processes or consumables used to make the first weld run or root deposit.

4.2.2.4 Bend test

Transverse bend tests for butt joints are to be in accordance with UR W2.6.

The mandrel diameter to thickness ratio (i.e. D/t) is to be that specified for the welding consumable (UR W17, UR W23) approvals + 1.

The bending angle is to be 180°. After testing, the test specimens are not to reveal any open defects in any direction greater than 3 mm. Defects appearing at the corners of a test specimen during testing are to be investigated case by case.

Two root and two face bend specimens are to be tested. For thickness 12 mm and over, four side bend specimens may alternatively be tested.

For butt joints in heterogeneous steel plates, face and root longitudinal bend test specimens may be used instead of the transverse bend test specimens.

W28 (cont)

4.2.2.5 Impact test

a) Normal and higher strength hull structural steels according to UR W11

The positions of specimens are to be in accordance with these requirements. Dimensions and testing are to be in accordance with the requirements of UR W2.7.

Test specimen with Charpy-V-notch are to be used and sampled from 1 to 2 mm below the surface of the base metal, transverse to the weld and on the side containing the last weld run.

V-notch specimens are located in the butt-welded joint as indicated in Fig. 1 and 2 of Annex A and the V-notch is to be cut perpendicular to the surface of the weld.

Test temperature and absorbed energy are to be in accordance with Table 1.

Table 1 Impact test requirements for butt joints (t ≤ 50 mm)(1),(2)

Grade of steel	Testing Temperature (C°)	Value of minimum average absorbed energy (J)		
		For manually or semi-automatically welded joints		For automatically welded joints
		Downhand, Horizontal, Overhead	Vertical upward, Vertical downward	
A(3)	20	47	34	34
B(3), D	0			
E	-20			
A32, A36	20			
D32, D36	0			
E32, E36	-20			
F32, F36	-40			
A40	20		39	39
D40	0			
E40	-20			
F40	-40			

Note:

(1) For thickness above 50 mm impact test requirements are to be agreed by the Society.

(2) These requirements are to apply to test piece of which butt weld is perpendicular to the rolling direction of the plates.

(3) For Grade A and B steels average absorbed energy on fusion line and in heat affected zone is to be minimum 27 J.

When butt welds are made between different steel grades/types, the test specimens are to be taken from the side of the joint with lower toughness of steel. Temperature and absorbed energy results are to be in accordance with the requirements for the lower toughness steel.

Where more than one welding process or consumable has been used to make the test weld, impact test specimens are to be taken from the respective areas where each was employed. This is not to apply to the process or consumables used solely to make the first weld run or root deposit.

W28 (cont)

The testing of sub - size specimen is to be in accordance with UR W2.7.2

b) High strength quenched and tempered steels according to UR W16

Impact test is to be performed as described in the above a).

V-notch specimens are located in the butt welded joint as indicated in Fig. 1 and 2 of Annex A and the V-notch is to be cut perpendicular to the surface of the weld.

Test temperature and absorbed energy are to be in accordance with the requirements of base metal as specified in UR W16.

c) Weldable C and C-Mn hull steel castings and forgings according to UR W7 and UR W8

For base metal with specified impact values test temperature and absorbed energy are to be in accordance with the requirements of the base metal to be welded.

4.2.2.6 Macro examination

The test specimens are to be prepared and etched on one side to clearly reveal the weld metal, the fusion line and the heat affected zone.

Macro examination is to include about 10 mm unaffected base metal.

The examination is to reveal a regular weld profile, through fusion between adjacent layers of weld and base metal and the absence of defects such as cracks, lack of fusion etc.

4.2.2.7 Hardness test

Hardness test is required for steels with specified minimum yield strength of $R_{eH} \geq 355$ N/mm^2. The Vickers method HV 10 is normally to be used. The indentations are to be made in the weld metal, the heat affected zone and the base metal measuring and recording the hardness values. At least two rows of indentations are to be carried out in accordance with Fig. 1 and 2 of Annex B.

For each row of indentations there is to be a minimum of 3 individual indentations in the weld metal, the heat affected zones (both sides) and the base metal (both sides). A typical example is shown in Annex B.

The results from the hardness test are not to exceed the following:

- Steel with a specified minimum yield strength $R_{eH} \leq 420$ N/mm^2 ; 350 HV10
- Steel with a specified minimum yield strength 420 N/mm^2 < $R_{eH} \leq 690$ N/mm^2 ; 420 HV10

4.3 Fillet welds

4.3.1 Assembly of test pieces

The test assembly is to be of a size sufficient to ensure a reasonable heat distribution and according to Fig. 3 with the minimum dimensions:

- manual and semi-automatic welding:

  width a = 3 x t, min. 150 mm
  length b = 6 x t, min. 350 mm

W28 (cont)

- automatic welding:

  width a = 3 x t, min. 150 mm
  length b = 1000 mm

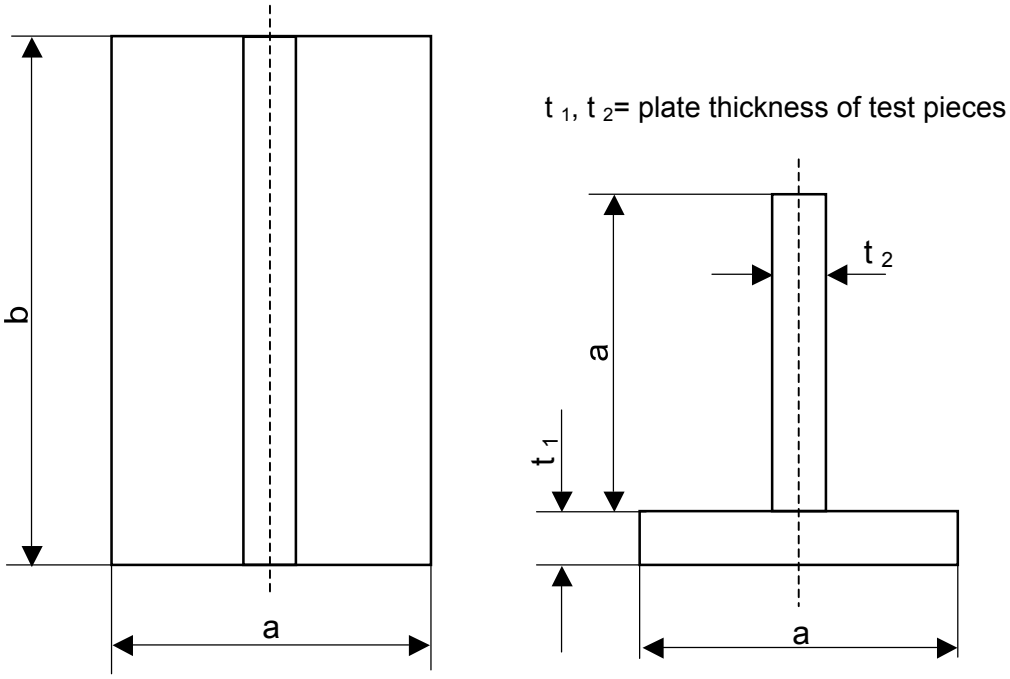

Fig.3 Test assembly for fillet weld

4.3.2 Welding of test pieces

The test assembly is welded on one side only. For single run manual and semi-automatic welding, a stop/restart is to be included in the test length and its position is to be clearly marked for subsequent examination.

4.3.3 Examinations and tests

Test assemblies are to be examined non-destructively and destructively in accordance with the following:

- Visual testing	100 %
- Surface crack detection	100 % (dye penetrant testing or magnetic particle testing)
- Macro examination	two specimen as per 4.3.3.2
- Hardness test	required as per 4.3.3.3
- Fracture test	required as per 4.3.3.4

W28 (cont)

4.3.3.1 Non-destructive testing

Test assemblies are to be examined by visual and by non-destructive testing prior to the cutting of test specimen. In case that any post-weld heat treatment is required or specified non-destructive testing is to be performed after heat treatment. For steels according to UR W16 with specified minimum yield strength of 420 N/mm^2 and above the non-destructive testing is to be delayed for a minimum of 48 hrs, unless heat treatment has been carried out. NDT procedures are to be agreed with the Society.

Imperfections detected by visual or non-destructive testing are to be assessed in accordance with ISO 5817, class B except for excess convexity and excess throat thickness for which the level C applies.

4.3.3.2 Macro examination

The test specimens are to be prepared and etched on one side to clearly reveal the weld metal, fusion line, root penetration and the heat affected zone.

Macro examination is to include about 10 mm unaffected base metal.

The examination is to reveal a regular weld profile, through fusion between adjacent layers of weld and base metal, sufficient root penetration and the absence of defects such as cracks, lack of fusion etc.

4.3.3.3 Hardness test

Hardness test is required for steels with a specified minimum yield strength of $R_{eH} \geq 355$ N/mm^2. The Vickers method HV 10 is normally to be used. The indentations are to be made in the weld metal, the heat affected zone and the base metal measuring and recording the hardness values. At least two rows of indentations are to be carried out in accordance with Fig. 3, 4a and 4b of Annex B.

For each row of indentations there is to be a minimum of 3 individual indentations in the weld metal, the heat affected zone (both sides) and the base metal (both sides). A typical example is shown in Annex B.

The results from the hardness test are not to exceed the following:

- Steel with a specified minimum yield strength $R_{eH} \leq 420$ N/mm^2 ; 350 HV10
- Steel with a specified minimum yield strength 420 N/mm^2 < $R_{eH} \leq 690$ N/mm^2 ; 420 HV10

4.3.3.4 Fracture test

The fracture test is to be performed by folding the upright plate onto the through plate. Evaluation is to concentrate on cracks, porosity and pores, inclusions, lack of fusion and incomplete penetration. Imperfection that are detected is to be assessed in accordance with ISO 5817, class B.

4.4 Re-testing

4.4.1 If the test piece fails to comply with any of the requirements for visual or non-destructive testing one further test piece is to be welded and subjected to the same examination. If this additional test piece does not comply with the relevant requirements, the pWPS is to be regarded as not capable of complying with the requirements without modification.

W28 (cont)

4.4.2 If any test specimens fail to comply with the relevant requirements for destructive testing due to weld imperfections only, two further test specimens are to be obtained for each one that failed. These specimens can be taken from the same test piece if there is sufficient material available or from a new test piece, and are to be subjected to the same test. If either of these additional test specimens does not comply with the relevant requirements, the pWPS is to be regarded as not capable of complying with the requirements without modification.

4.4.3 If a tensile test specimen fails to meet the requirements, the re-testing is to be in accordance with UR W 2.4.3.

4.4.4 If there is a single hardness value above the maximum values allowed, additional hardness tests are to be carried out (on the reverse of the specimen or after sufficient grinding of the tested surface). None of the additional hardness values is to exceed the maximum hardness values required.

4.4.5 The re-testing of Charpy impact specimens are to be carried out in accordance with UR W 2.7.4.

4.4.6 Where there is insufficient welded assembly remaining to provide additional test specimens, a further assembly is to be welded using the same procedure to provide the additional specimens.

4.5 Test record

4.5.1 Welding conditions for test assemblies and test results are to be recorded in welding procedure test record. Forms of welding procedure test records can be taken from the Society's rules or from relevant standards.

4.5.2 A statement of the results of assessing each test piece, including repeat tests, is to be made for each welding procedure test. The relevant items listed for the WPS of these requirements are to be included.

4.5.3 A statement that the test piece was made according to the particular welding procedure is to be signed by the Surveyor witnessing the test and is to include the Society´s identification.

5. Range of approval

5.1 General

5.1.1 All the conditions of validity stated below are to be met independently of each other.

5.1.2 Changes outside of the ranges specified are to require a new welding procedure test.

5.1.3 Shop primers may have an influence on the quality of fillet welds and is to be considered. Welding procedure qualification with shop primer will qualify those without but not vice versa.

5.2 Base metal

5.2.1 Normal and higher strength hull structural steels according to UR W11

a) For each strength level, welding procedures are considered applicable to the same and lower toughness grades as that tested.

W28 (cont)

b) For each toughness grade, welding procedures are considered applicable to the same and two lower strength levels as that tested.

c) For applying the above a) and b) to high heat input processes above 50kJ/cm, e.g. the two-run technique with either submerged arc or gas shielded metal arc welding, electro slag and electro gas welding, welding procedure is applicable to that toughness grade tested and one strength level below.

Where steels used for construction are supplied from different delivery conditions from those tested the Society may require additional tests.

5.2.2 High strength quenched and tempered steels according to UR W16

a) For each strength level, welding procedures are considered applicable to the same and lower toughness grades as that tested.

b) For each toughness grade, welding procedures are considered applicable to the same and one lower strength level as that tested.

c) The approval of quenched and tempered steels does not quality thermo-mechanically rolled steels (TMCP steels) and vice versa.

5.2.3 Weldable C and C-Mn hull steel forgings according to UR W7

a) Welding procedures are considered applicable to the same and lower strength level as that tested.

b) The approval of quenched and tempered hull steel forgings does not quality other delivery conditions and vice versa.

5.2.4 Weldable C and C-Mn hull steel castings according to UR W8

a) Welding procedures are considered applicable to the same and lower strength level as that tested.

b) The approval of quenched and tempered hull steel castings does not quality other delivery conditions and vice versa.

5.3 Thickness

5.3.1 The qualification of a WPS carried out on a test assembly of thickness t is valid for the thickness range given in Table 2.

Table 2 Approval range of thickness for butt and T-joint welds and fillet welds

Thickness of test piece T(1) (mm)	Range of approval	
	Butt and T-joint welds with single run or single run from both sides	Butt and T-joint welds with multi-run and fillet welds(2)
$3 < t \leq 12$	0.7 x t to 1.1 x t	3 to 2 x t
$12 < t \leq 100$	0.7 x t to 1.1 x t(3)	0.5 x t to 2 x t (Max. 150)

W28 (cont)

Note:

(1) For multi process procedures, the recorded thickness contribution of each process is to be used as a basis for the range of approval for the individual welding process.

(2) For fillet welds, the range of approval is to be applied to both base metals.

(3) For high heat input processes over 50kJ/cm, the upper limit of range of approval is to be 1.0 x t.

5.3.2 In addition to the requirements of Table 2, the range of approval of throat thickness “a” for fillet welds is to be as follows:

- Single run ; “0.75 x a” to “1.5 x a”

- Multi-run ; as for butt welds with multi-run (i.e. a=t)

5.3.3 For the vertical-down welding, the test piece thickness “t” is always taken as the upper limit of the range of application.

5.3.4 For unequal plate thickness of butt welds the lesser thickness is ruling dimension.

5.3.5 Notwithstanding the above, the approval of maximum thickness of base metal for any technique is to be restricted to the thickness of test assembly if three of the hardness values in the heat affected zone are found to be within 25 HV of the maximum permitted, as stated 4.2.2.7 and 4.3.3.3.

5.4 Welding position

Approval for a test made in any position is restricted to that position (see Annex C). To qualify a range of positions, test assemblies are to be welded for highest heat input position and lowest heat input position and all applicable tests are to be made on those assemblies.

5.5 Welding process

5.5.1 The approval is only valid for the welding process(es) used in the welding procedure test. It is not permitted to change from a multi-run to a single run.

5.5.2 For multi-process procedures the welding procedure approval may be carried out with separate welding procedure tests for each welding process. It is also possible to make the welding procedure test as a multi-process procedure test. The approval of such a test is only valid for the process sequence carried out during the multi-process procedure test.

5.6 Welding consumable

Except high heat input processes over 50kJ/cm, welding consumables cover other approved welding consumables having the same grade mark including all suffixes specified in UR W17 and UR W23 with the welding consumable tested.

5.7 Heat input

5.7.1 The upper limit of heat input approved is 25% greater than that used in welding the test piece or 55kJ/cm whichever is smaller, except that the upper limit is 10% greater than that for high heat input processes over 50kJ/cm.

W28 (cont)

5.7.2 The lower limit of heat input approved is 25% lower than that used in welding the test piece.

5.8 Preheating and interpass temperature

5.8.1 The minimum preheating temperature is not to be less than that used in the qualification test.

5.8.2 The maximum interpass temperature is not to be higher than that used in the qualification test.

5.9 Post-weld heat treatment

The heat treatment used in the qualification test is to be maintained during manufacture. Holding time may be adjusted as a function of thickness.

5.10 Type of joint

5.10.1 Range of approval depending on type of welded joints for test assembly is to be specified in Table 3.

5.10.2 A qualification test performed on a butt weld will also qualify for fillet welding within the thickness ranges specified for fillet welds specified in 5.3 above.

Table 3 Range of approval for type of welded joint

Type of welded joint for test assembly			Range of approval	
Butt welding	One side	With backing	A	A, C
		Without backing	B	A, B, C, D
	Both side	With gouging	C	C
		Without gouging	D	C, D

5.11 Other variables

The range of approval relating to other variables may be taken according to the Society requirements.

W28
(cont)

Annex A

Location of Charpy V-notch impact test

W28
(cont)

a) t≤50mm[(1)]

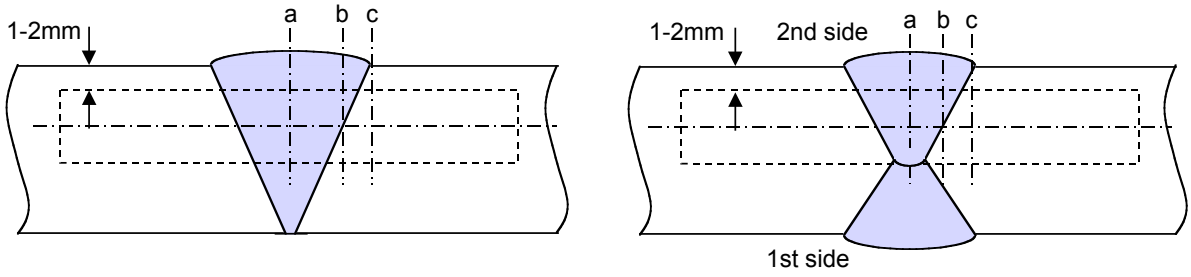

Note:

(1) For one side single run welding over 20mm notch location “a” is to be added on root side.

b) t>50mm

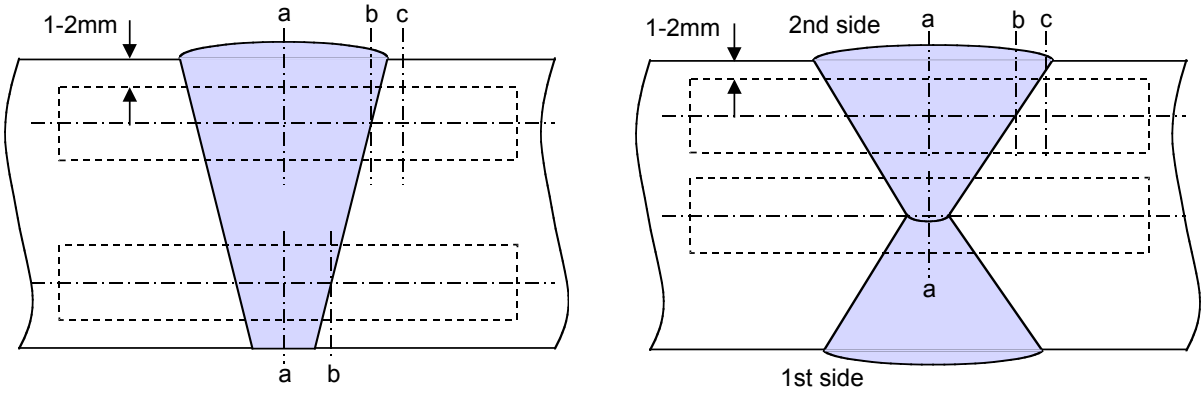

Notch locations:
a : center of weld “WM”
b : on fusion line “FL”
c : in HAZ, 2mm from fusion line

Fig. 1 Locations of V-notch for butt weld of normal heat input (heat input ≤ 50 kJ/cm)

W28
(cont)

a) t≤50mm[(1)]

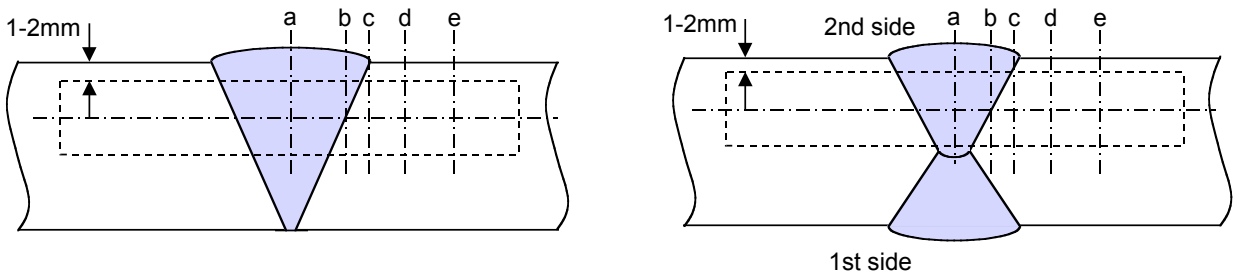

Note:

(1) For one side welling with thickness over 20mm notch locations “a”, “b” and “c” are to be added on root side.

b) t>50mm

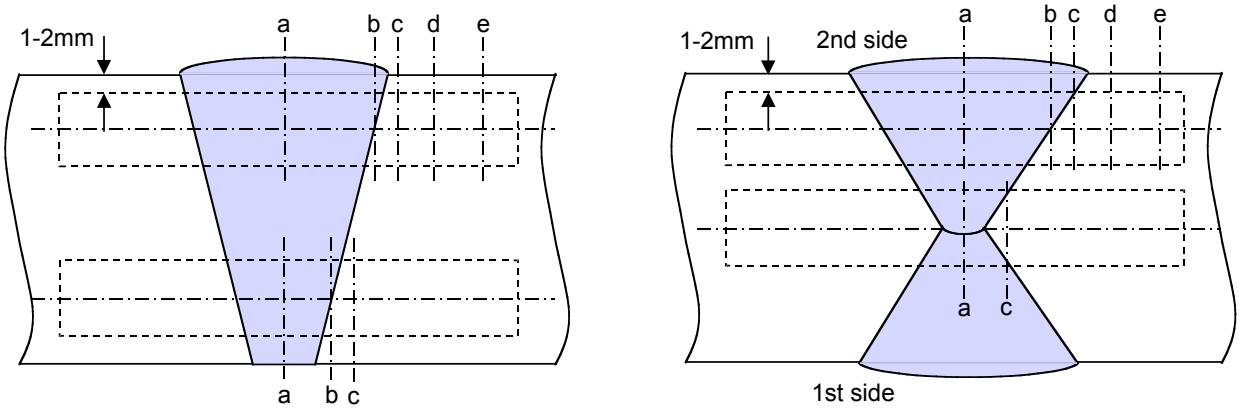

Notch locations:
a : center of weld “WM”
b : on fusion line “FL”
c : in HAZ, 2mm from fusion line
d : in HAZ, 5mm from fusion line
e : in HAZ, 10mm from fusion line in case of heat input > 200kJ/cm

Fig. 2 Locations of V-notch for butt weld of high heat input (heat input > 50kJ/cm)

W28
(cont)

Annex B

Hardness test

(Typical examples of hardness test)

W28
(cont)

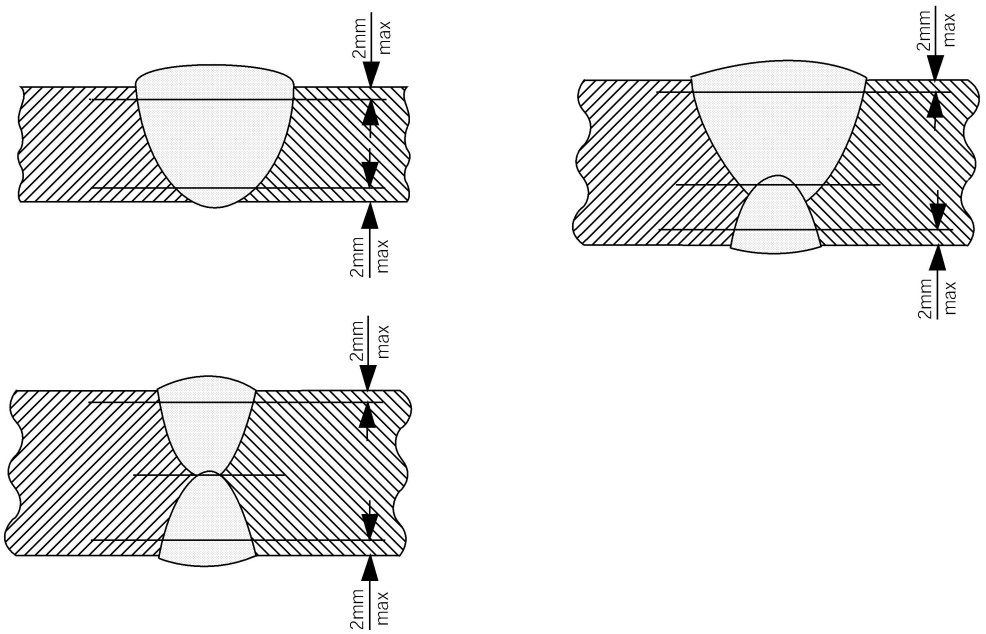

Fig. 1 Examples of hardness test with rows of indentations (R) in butt welds

Table 1 Recommended distances *l* between indentations for hardness test in the heat affected zone

Vickers hardness Symbol	Distance between indentations *l* (mm)
HV 10	1

The distance of any indentation from the previous indentation is not to be less than the value allowed for the previous indentation by ISO 6507/1.

W28
(cont)

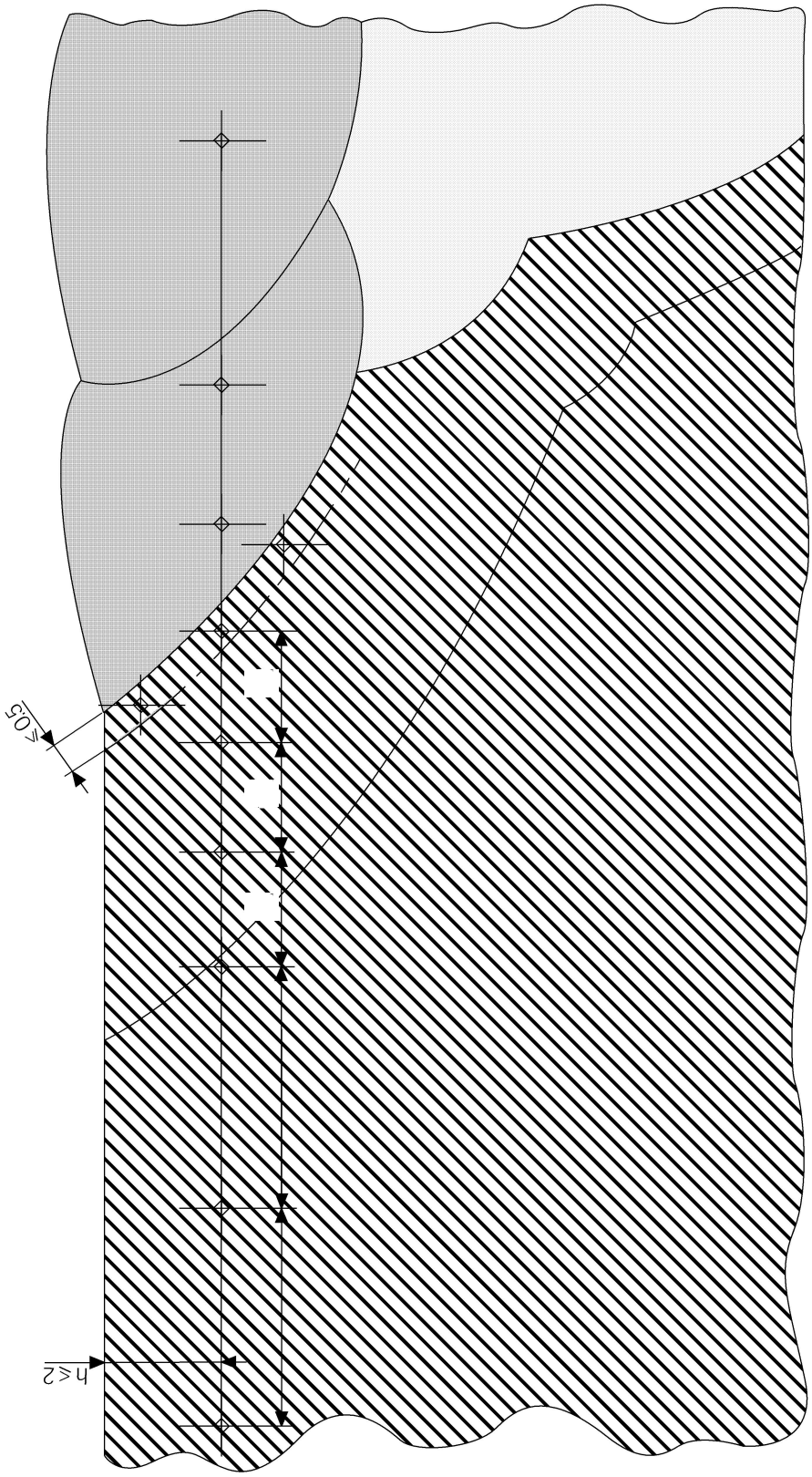

Fig. 2 Example showing the position of the indentations for hardness test in the weld metal, the heat affected zone and the base metal of a butt weld (dimensions in mm)

W28
(cont)

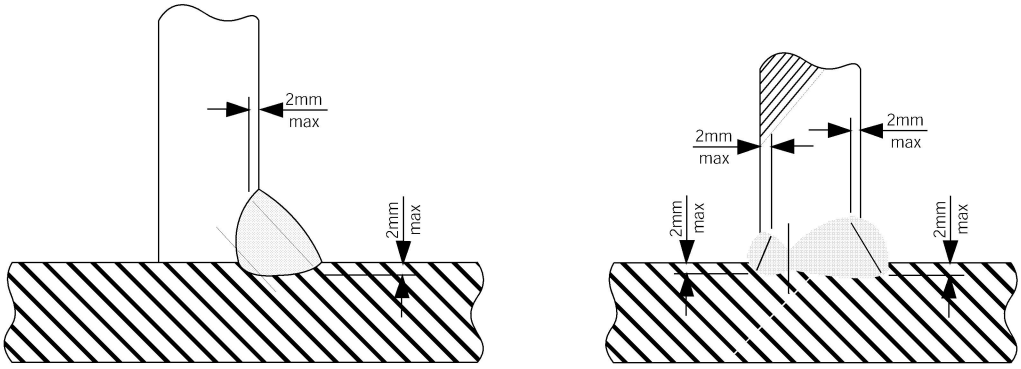

a) Fillet weld **b) T-joint weld**

Fig. 3 Examples of hardness test with row indentation (R) in fillet welds and in T-joint welds

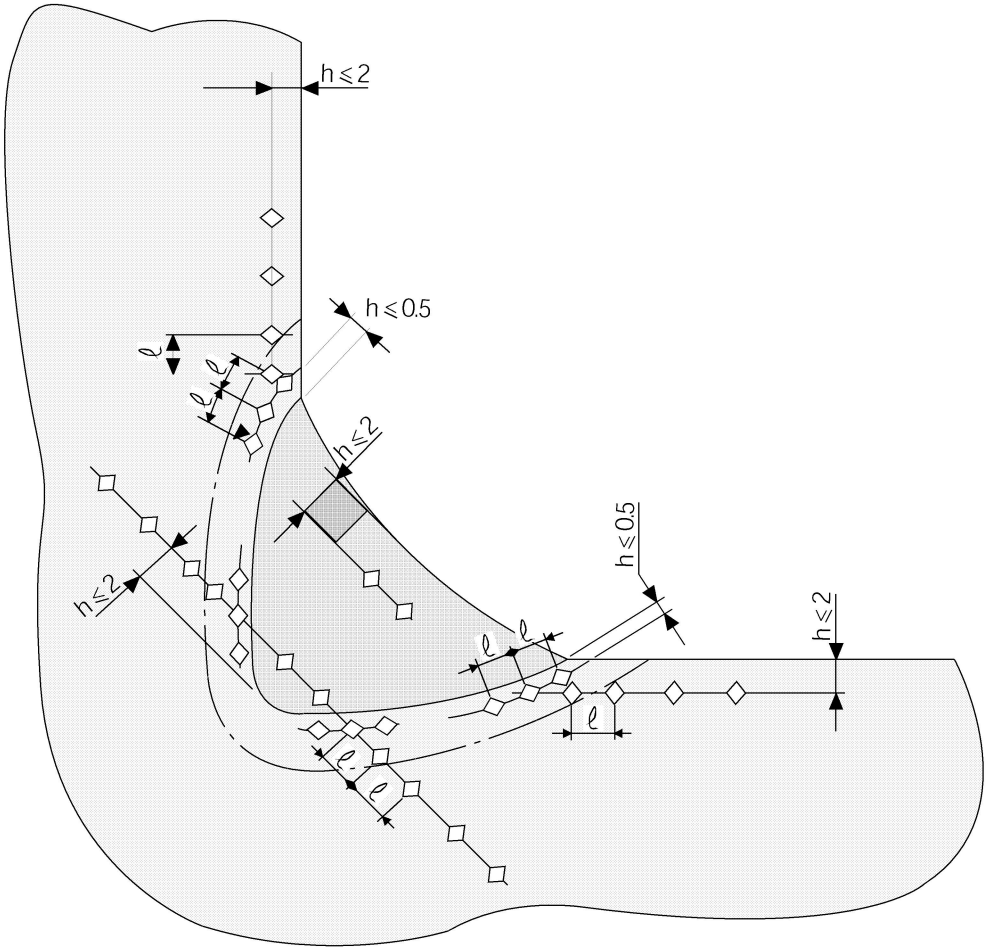

Fig. 4a Example showing the position of the indentations for hardness test in the weld metal, the heat affected zone and the base metal of a fillet weld (dimensions in mm)

W28
(cont)

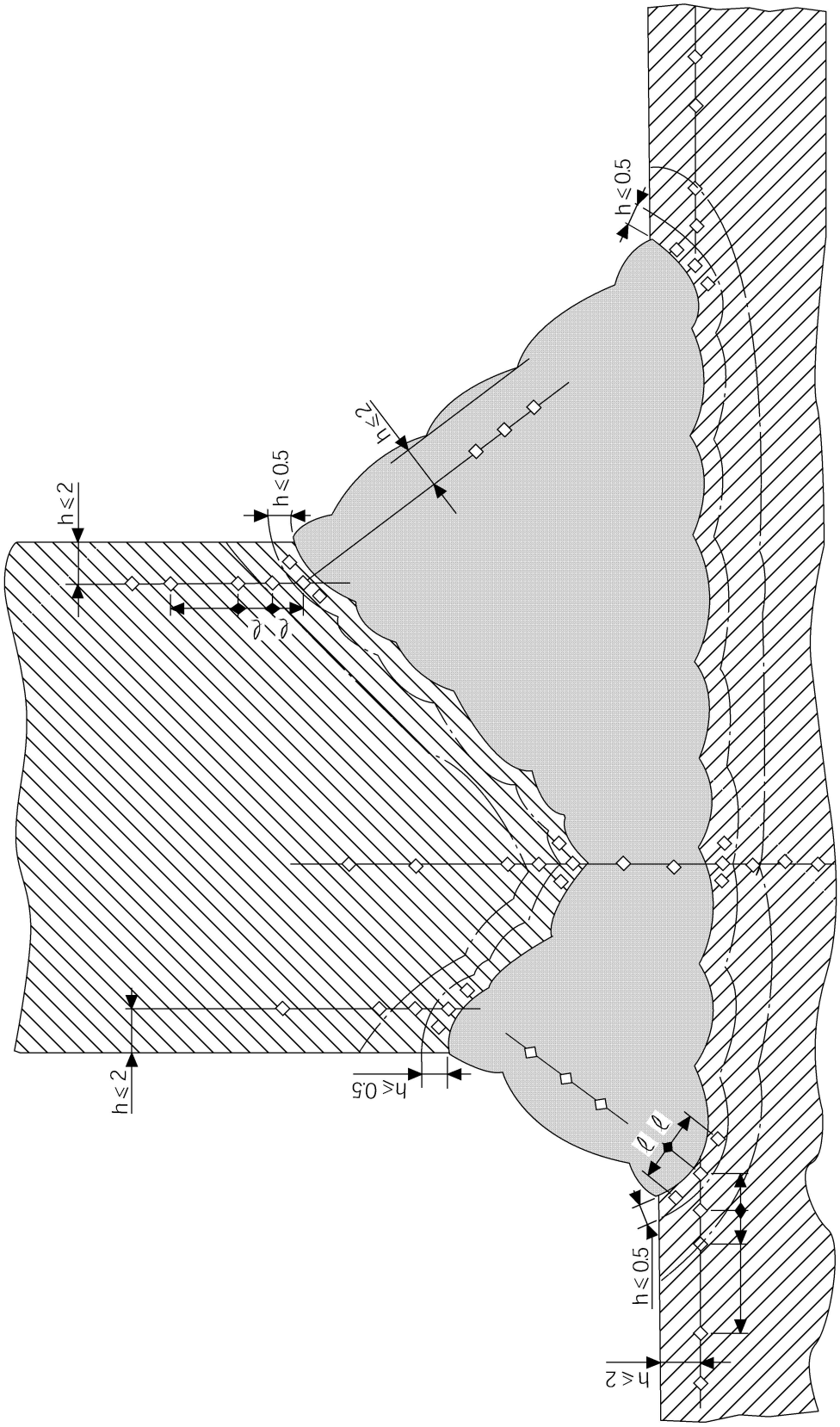

Fig. 4b Example showing the position of the indentations for hardness test on the weld metal, the heat affect zone and the base metal of a T-joint weld (dimensions in mm)

W28
(cont)

Annex C

Welding positions

W28 (cont)

Annex C.1: Welding positions according to ISO Standard

a) Butt welds for plates

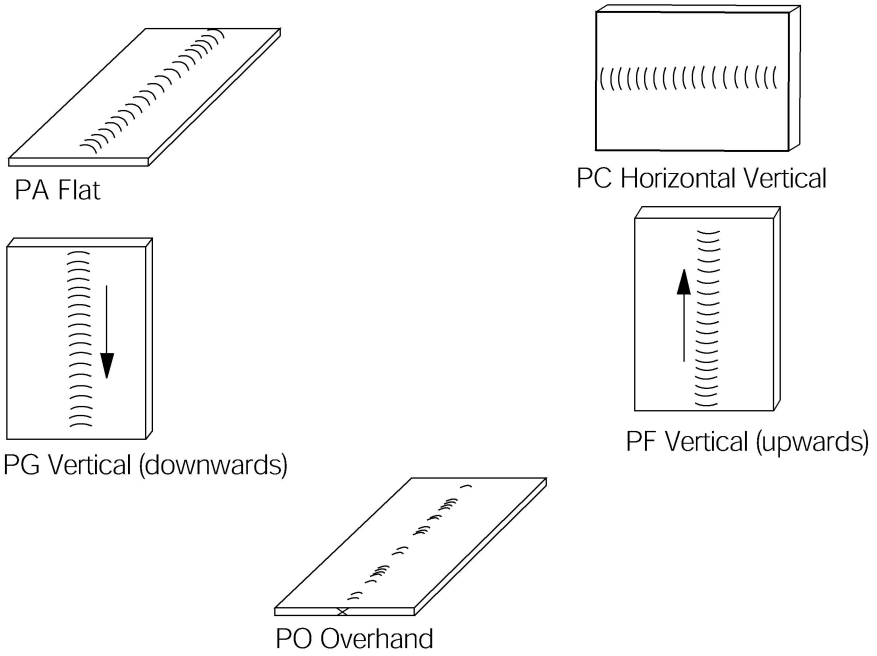

b) Fillet welds for plates

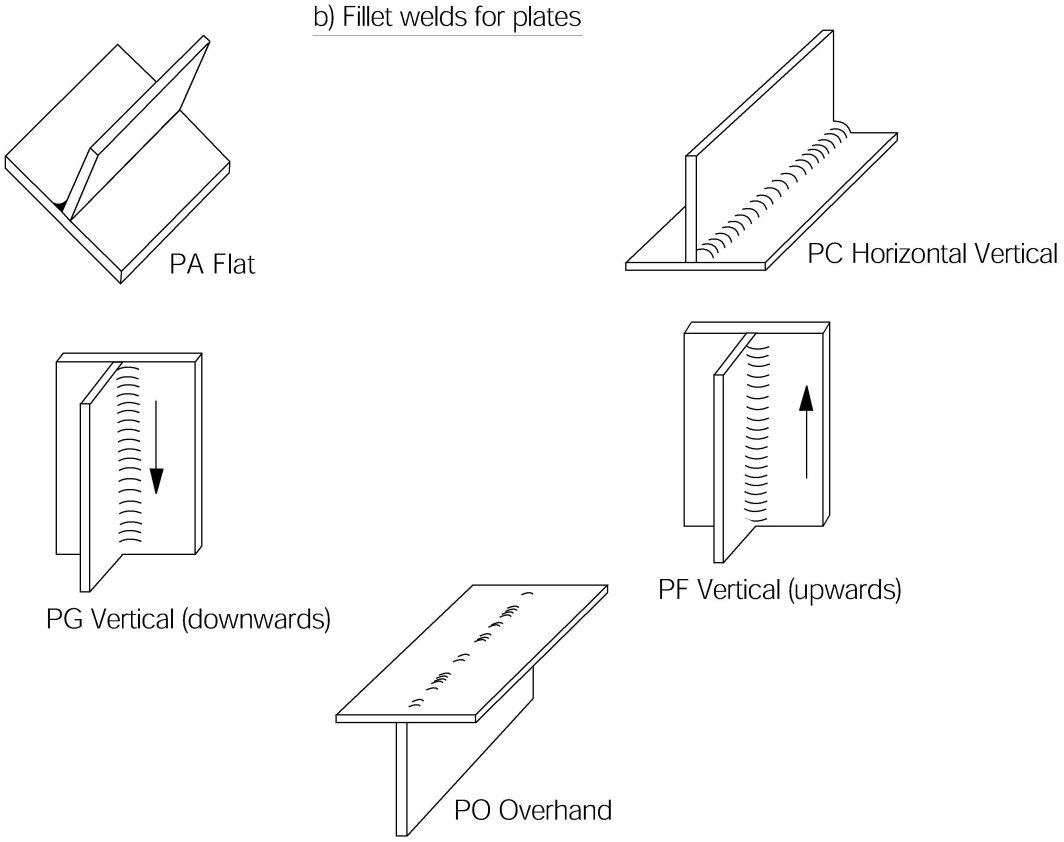

W28 (cont)

Annex C.2: Welding positions according to AWS-Code

a) Butt weld for plates

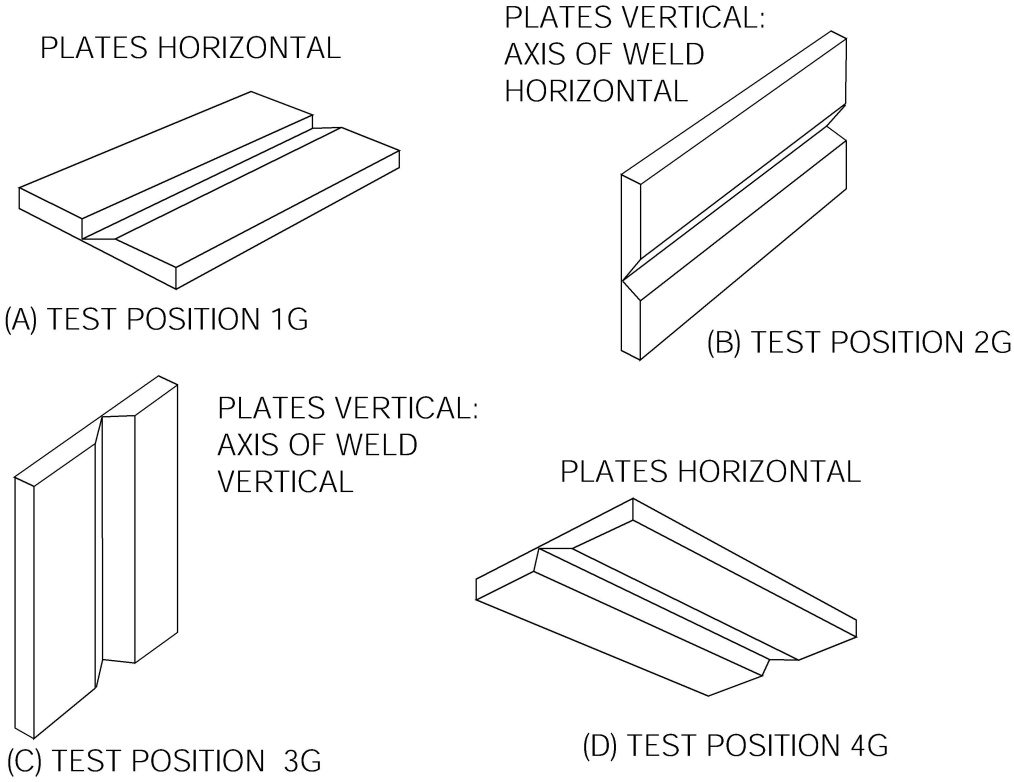

W28
(cont)

b) Fillet welds for plates

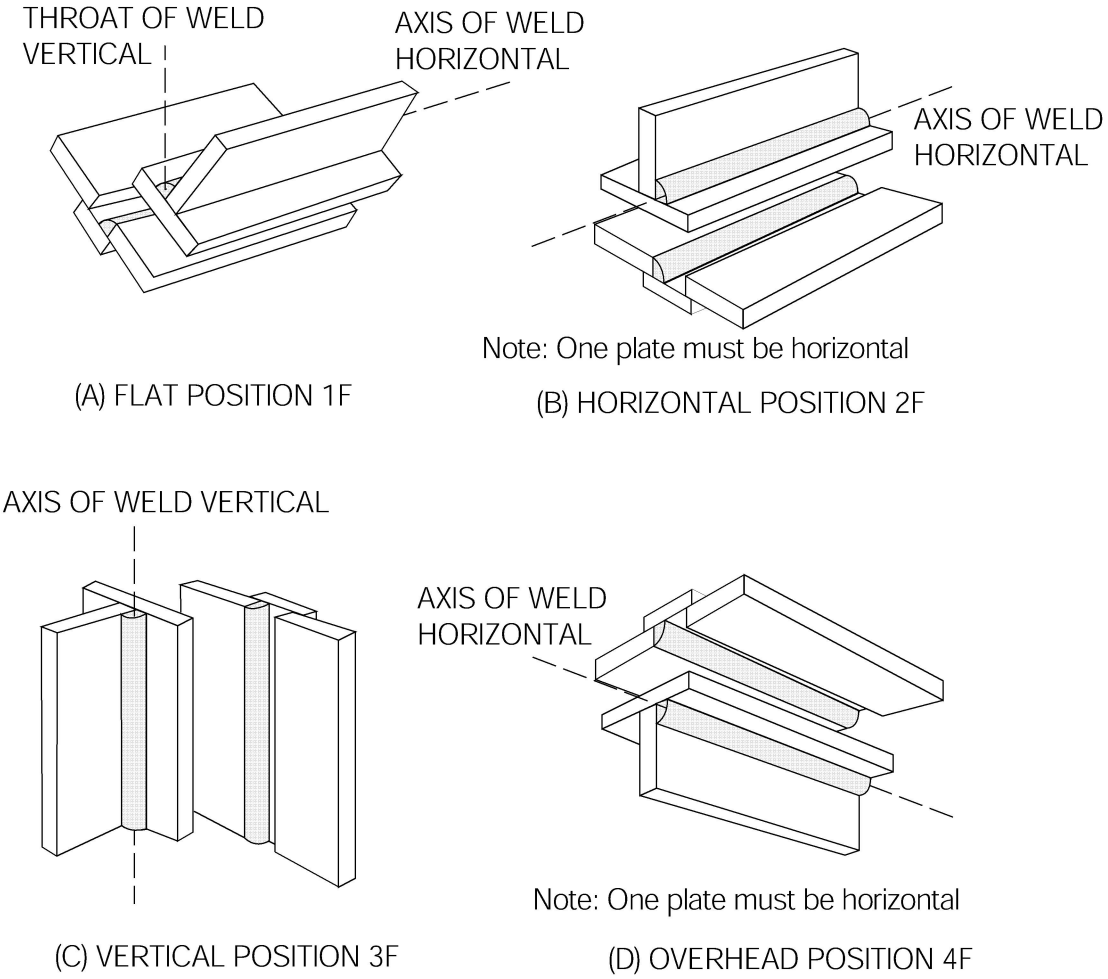

End of Document

W29 Requirements for manufacture of anchors

(June 2005)

1. General requirements

1.1 Scope

These Rules apply to the materials, manufacture and testing, and certification of anchors, shanks and anchor shackles produced from cast or forged steel, or fabricated by welded rolled steel plate and bars. Frequent reference is made to UR A1.

With regard to holding power tests at sea for high holding power (HHP) and super high holding power (SHHP) anchors, refer to UR A1.

1.2 Types of anchor

The types of anchor covered include:

a) Ordinary anchors. Refer to UR A1.4.1.1
   i) Stockless anchors
   ii) Stocked anchors

b) HHP anchors. Refer to UR A1.4.1.2

c) SHHP anchors, not exceeding 1500kg in mass. Refer to UR A1.4.1.3

Any changes to the design made during manufacture are to have prior written agreement from the Classification Society.

2. Materials

2.1 Materials for anchors

All anchors are to be manufactured from materials meeting the requirements of the UR Ws as indicted below:

a) Cast steel anchor flukes, shanks, swivels and shackles are to be manufactured and tested in accordance with the requirements of UR W8 and comply with the requirements for castings for welded construction. The steel is to be fine grain treated with Aluminium. If test programme B is selected in Section 4.2 then Charpy V notch (CVN) impact testing of cast material is required. Special consideration is to be given to the use of other grades of steels for the manufacture of swivels.

b) Forged steel anchor pins, shanks, swivels and shackles are to be manufactured and tested in accordance with the requirements of UR W7. Shanks, swivels and shackles are to comply with the requirements for carbon and carbon-manganese steels for welded construction. Special consideration is to be given to the use of other grades of steels for the manufacture of swivels.

Note: This UR is to be uniformly implemented by IACS Societies in respect of anchors, the manufacturing of which is commenced on or after 1 January 2007.

c) Rolled billets, plate and bar for fabricated steel anchors are to be manufactured and tested in accordance with the requirements of UR W11.

d) Rolled bar intended for pins, swivels and shackles are to be manufactured and tested in accordance with the requirements of UR W7 or UR W11.

2.2 Materials for SHHP anchors

In addition to the requirements of 2.1 above, SHHP anchors are to be produced in accordance with the material toughness requirements of UR A1.4.4.

3. Manufacture of anchors

3.1 Tolerance

If not otherwise specified on standards or on drawings demonstrated to be appropriate, the following assembly and fitting tolerance are to be applied.

The clearance either side of the shank within the shackle jaws is to be no more than 3mm for small anchors up to 3 tonnes weight, 4mm for anchors up to 5 tonnes weight, 6mm for anchors up to 7 tonnes weight and is not to exceed 12 mm for larger anchors.

The shackle pin is to be a push fit in the eyes of the shackle, which are to be chamfered on the outside to ensure a good tightness when the pin is clenched over on fitting. The shackle pin to hole tolerance is to be no more than 0.5mm for pins up to 57mm and 1.0mm for pins of larger diameter.

The trunnion pin is to be a snug fit within the chamber and be long enough to prevent horizontal movement. The gap is to be no more than 1% of the chamber length.

The lateral movement of the shank is not to exceed 3 degrees, see Figure 1.

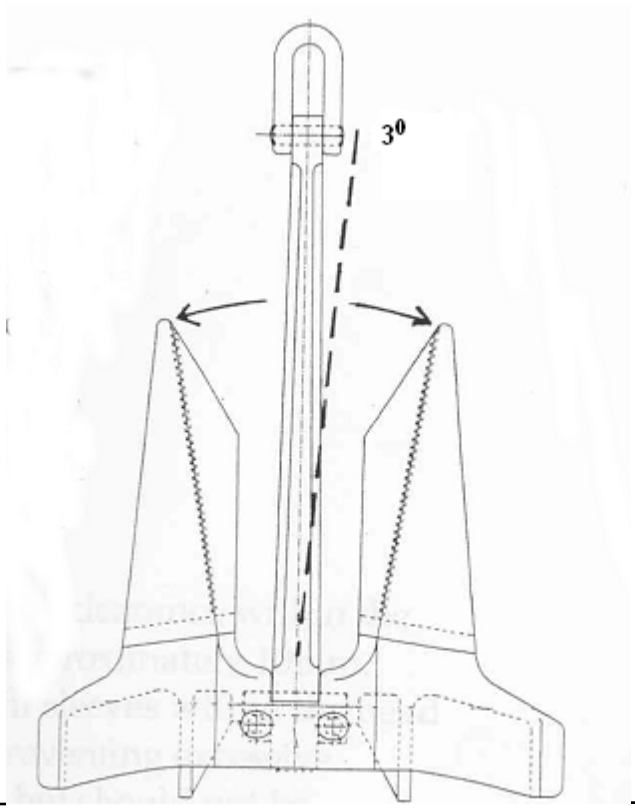

Figure 1 Allowable lateral movement of shank

3.2 Welding of anchors

Welded construction of fabricated anchors is to be done in accordance with procedures approved by the Classification Society. Welding is to be carried out by qualified welders, following the approved welding procedures qualified in accordance with UR W28, using consumables manufactured in accordance with the requirements of UR W17. NDE is to be carried in accordance with the requirements of 4.2 Product tests.

3.3 Heat treatment

Components for cast or forged anchors are to properly heat treated; fully annealed; normalised or normalised and tempered in accordance with UR W7 and UR W8.

Fabricated anchors may require stress relief after welding depending upon weld thickness. Stress relief is to be carried out as indicated in the approved welding procedure. Stress relief temperatures are not to exceed the tempering temperature of the base material.

3.4 Freedom from defects

All parts are to have a clean surface consistent with the method of manufacture and be free from cracks, notches, inclusions and other defects that would impair the performance of the product.

3.5 Repairs

Any necessary repairs to forged and cast anchors are to be agreed by the Surveyor and carried out in accordance with the repair criteria indicated in UR W7 and UR W8. Repairs to fabricated anchors are to be agreed by the Surveyor and carried out in accordance with qualified weld procedures, by qualified welders, following the parameters of the welding procedures used in construction.

3.6 Anchor assembly

Assembly and fitting are to be done in accordance with the design details.

Securing of the anchor pin, shackle pin or swivel nut by welding is to be done in accordance with an approved procedure.

4. Testing and certification

4.1 Proof load test

Proof load tests are to be carried out by an approved testing facility.

Proof load testing for Ordinary, HHP and SHHP anchors is to be carried out in accordance with the pertinent requirements of UR A1.4.3.

4.2 Product tests

4.2.1 Product Test Programmes

The Classification Society can request that either programme A or programme B be applied.

Table 1 Applicable programmes for each product form

Product test	Product form		
	Cast components	Forged components	Fabricated/Welded components
Programme A	Applicable	Not applicable	Not applicable
Programme B	Applicable (1)	Applicable	Applicable

Notes : (1) CVN impact tests are to be carried out to demonstrate at least 27 joules average at 0ºC. Refer to 2.1 a).

Table 2 Product test requirements for programme A and B

Programme A	Programme B
Drop test	–
Hammering test	–
Visual inspection	Visual inspection
General NDE	General NDE
–	Extended NDE

4.2.2 Drop test

Each anchor fluke and shank is individually raised to a height of 4m and dropped on to a steel slab without fracturing. The steel slab is to be suitable to resist the impact of the dropped component.

4.2.3 Hammering test

After the drop test, hammering tests are carried out on each anchor fluke and shank, which is slung clear of the ground, using a non-metallic sling, and hammered to check the soundness of the component. A hammer of at least 3kg mass is to be used.

4.2.4 Visual inspection

After proof loading visual inspection of all accessible surfaces is to be carried out.

4.2.5 General non-destructive examination

After proof loading general NDE is to be carried out as indicated in the following Tables 3 and 4.

Table 3 General NDE for Ordinary and HHP anchors

Location	Method of NDE
Feeders of castings	PT or MT
Risers of castings	PT or MT
Weld repairs	PT or MT
Forged components	Not required
Fabrication welds	PT or MT

Table 4 General NDE for SHHP anchors

Location	Method of NDE
Feeders of castings	PT or MT and UT
Risers of castings	PT or MT and UT
All surfaces of castings	PT or MT
Weld repairs	PT or MT
Forged components	Not required
Fabrication welds	PT or MT

IACS Recommendation No. 69 “Guidelines for non-destructive examination of marine steel castings” is regarded as an example of an acceptable standard for surface and volumetric examination.

4.2.6 Extended non-destructive examination

After proof loading general NDE is to be carried out as indicated in the following Table 5.

Table 5 Extended NDE for Ordinary, HHP and SHHP anchors

Location	Method of NDE
Feeders of castings	PT or MT and UT
Risers of castings	PT or MT and UT
All surfaces of castings	PT or MT
Random areas of castings	UT
Weld repairs	PT or MT
Forged components	Not required
Fabrication welds	PT or MT

IACS Recommendation No. 69 “Guidelines for non-destructive examination of marine steel castings” is regarded as an example of an acceptable standard for surface and volumetric examination.

4.2.7 Repair criteria

If defects are detected by NDE, repairs are to be carried out in accordance with 3.5. For fracture and unsoundness detected in a drop test or hammering test, repairs are not permitted and the component is to be rejected.

4.3 Mass and dimensional inspection

Unless otherwise agreed, the verification of mass and dimensions is the responsibility of the manufacturer. The Surveyor is only required to monitor this inspection. The mass of the anchor is to exclude the mass of the swivel, unless this is an integral component.

4.4 Retests

Mechanical retest are permitted in accordance with the requirements of UR W2.

4.5 Marking

Anchors which meet the requirements are to be stamped on the shank and the fluke. The markings on the shank are to be approximately level with the fluke tips. On the fluke, these markings are to be approximately at a distance of two thirds from the tip of the bill to the center line of the crown on the right hand fluke looking from the crown towards the shank. The markings are to include:

- Mass of anchor
- Identification, e.g. test No. or certificate No.
- Society’s stamp
- Manufacturer’s mark

Additionally the unique cast identification is to be cast on the shank and the fluke.

4.6 Certification

Anchors which meet the requirements are to be certified by the Society at least with the following items:

- Manufacturer's name
- Type
- Mass
- Fluke and Shank identification numbers
- Grade of materials
- Proof test loads
- Heat treatment
- Marking applied to anchor

4.7 Painting

All types of anchor are not to be painted until all tests and inspections have been completed.

END

W30 Normal and higher strength corrosion resistant steels for cargo oil tanks

(Feb 2013)

Deleted 1 July 2015, replaced by UR W11.

End of Document

W31 YP47 Steels and Brittle Crack Arrest Steels

(Jan 2013) (Rev.1 Sept 2015) (Rev.2 Dec 2019 Complete Revision) (Rev.3 Mar 2023)

1. Scope

1.1 General

1.1.1 This UR defines the requirements on YP47 steels and brittle crack arrest steels as required by UR S33.

1.1.2 Unless otherwise specified in this UR, UR W11 is to be followed.

1.2 YP47 steels

1.2.1 Steels designated as YP47 refer to steels with a specified minimum yield point of 460 N/mm^2.

1.2.2 The YP47 steels can be applied to longitudinal structural members in the upper deck region of container carriers (such as hatch side coaming, hatch coaming top and the attached longitudinals, etc.). Special consideration is to be given to the application of YP47 steels for other hull structures.

1.2.3 This UR gives the requirements for YP47 steels in thickness greater than 50mm and not greater than 100mm intended for the upper deck region of container carriers. For YP47 steels outside scope of the said thickness range, special consideration is to be given by the Classification Society.

Notes:

1. This UR is to be applied by IACS Societies on ships contracted for construction on or after 1 January 2014.

2. Revision 1 of this UR is to be applied by IACS Societies to ships contracted for construction on or after 1 January 2017.

3. The “contracted for construction” date means the date on which the contract to build the vessel is signed between the prospective owner and the shipbuilder. For further details regarding the date of “contract for construction”, refer to IACS Procedural Requirement (PR) No. 29.

4. Revision 2 of this UR is to be uniformly implemented by IACS Societies on ships contracted for construction on or after 01 January 2021.

5. Revision 3 of this UR is to be uniformly implemented by IACS Societies when the application for certification of manufacturer approval is dated on or after 01 July 2024.

W31 (cont)

1.3 Brittle crack arrest steels

1.3.1 The brittle crack designation can be assigned to YP36 and YP40 steels specified in UR W11 and YP47 steels specified in this UR, which meet the additional brittle crack arrest requirements and properties defined in this UR.

1.3.2 The application of brittle crack arrest steels is to comply with UR S33, which covers longitudinal structural members in the upper deck region of container carriers (such as hatch side coaming, upper deck, hatch coaming top and the attached longitudinals, etc.).

1.3.3 The thickness range of brittle crack arrest steels is over 50mm and not greater than 100mm as specified in Table 3 of this UR.

2 Material specifications

2.1 YP47 steels

Material specifications for YP47 steels are specified in Table 1 and Table 2.

Table 1 Chemical composition and deoxidation practice for YP47 steels without specified brittle crack arrest properties

Grade	EH47
Deoxidation Practice	Killed and fine grain treated
Chemical Composition % (ladle samples)(6)(7)	
C max.	0.18
Mn	0.90 – 2.00
Si max.	0.55
P max.	0.020
S max.	0.020
Al (acid soluble min)	0.015 (1)(2)
Nb	0.02 – 0.05 (2)(3)
V	0.05 – 0.10 (2)(3)
Ti max.	0.02(3)
Cu max.	0.35
Cr max.	0.25
Ni max.	1.0
Mo max.	0.08
C_{eq} max.(4)	0.49
P_{cm} max.(5)	0.22

Notes:

1. The total aluminium content may be determined instead of the acid soluble content. In such cases the total aluminium content is to be not less than 0.020%.

2. The steel is to contain aluminium, niobium, vanadium or other suitable grain refining elements, either singly or in any combination. When used singly the steel is to contain the specified minimum content of the grain refining element. When used in combination, the specified minimum content of a fine graining element is not applicable.

W31 (cont)

3. The total niobium, vanadium and titanium content is not to exceed 0.12%.

4. The carbon equivalent C_{eq} value is to be calculated from the ladle analysis using the following formula:

$$C_{eq} = C + \frac{Mn}{6} + \frac{Cr + Mo + V}{5} + \frac{Ni + Cu}{15} (\%)$$

5. Cold cracking susceptibility P_{cm} value is to be calculated using the following formula:

$$P_{cm} = C + \frac{Si}{30} + \frac{Mn}{20} + \frac{Cu}{20} + \frac{Ni}{60} + \frac{Cr}{20} + \frac{Mo}{15} + \frac{V}{10} + 5B(\%)$$

6. Where additions of any other element have been made as part of the steelmaking practice subject to approval by the Classification Society, the content is to be indicated on product inspection certificate.

7. Variations in the specified chemical composition may be allowed subject to approval of Classification Society.

Table 2 Conditions of supply, grade and mechanical properties for YP47 steels without specified brittle crack arrest properties (1)

Supply condition	Grade	Tensile test			Impact test			
		Yield Strength (N/mm^2) min.	Tensile Strength (N/mm^2)	Elongation (%) min.	Test Temp. (°C)	Average Impact Energy (J) min.		
						50 < t ≤ 70	70 < t ≤ 85	85 < t ≤ 100
						Longitudinal	Longitudinal	Longitudinal
TMCP(2)	EH47	460	570 - 720	17	-40	53	64	75

t thickness (mm)

Notes:

1. The additional requirements for YP47 steel with brittle crack arrest properties is specified in 2.2 of this UR.

2. Other conditions of supply are to be in accordance with the Classification Society's procedures.

W31 (cont)

2.2 Brittle crack arrest steels

2.2.1 Brittle crack arrest steels are defined as steel plate with the specified brittle crack arrest properties measured by either the brittle crack arrest toughness K_{ca} or Crack Arrest Temperature (CAT).

2.2.2 In addition to the required mechanical properties of UR W11 for YP36 and YP40 and Table 2 of this UR for YP47, brittle crack arrest steels are to comply with the requirements specified in Table 3 and Table 4 of this UR.

2.2.3 The brittle crack arrest properties specified in Table 3 are to be evaluated for the products in accordance with the procedure approved by the Classification Society. Test specimens are to be taken from each piece (means "the rolled product from a single slab or ingot if this is rolled directly into plates" as defined in UR W11), unless otherwise agreed by the Classification Society.

Table 3 Requirement of brittle crack arrest properties for brittle crack arrest steels

Suffix to the steel grade(1)	Thickness range (mm)	Brittle crack arrest properties(2)(6)	
		Brittle Crack Arrest Toughness K_{ca} at -10 ℃ (N/mm$^{3/2}$) (3)	Crack Arrest Temperature CAT (℃) (4)
BCA1	50 < t ≤ 100	6,000 min.	-10 or below
BCA2	80 < t ≤ 100(7)	8,000 min.	(5)

t: thickness (mm)

Notes:

1. Suffix "BCA1" or "BCA2" is to be affixed to the steel grade designation (e.g. EH40-BCA1, EH47-BCA1, EH47-BCA2, etc.).

2. Brittle crack arrest properties for brittle crack arrest steels are to be verified by either the brittle crack arrest toughness K_{ca} or Crack Arrest Temperature (CAT).

3. K_{ca} value is to be obtained by the brittle crack arrest test specified in Annex 3 of this UR.

4. CAT is to be obtained by the test method specified in Annex 4 of this UR.

5. Criterion of CAT for brittle crack arrest steels corresponding to Kca=8,000 N/mm$^{3/2}$ is to be approved by the Classification Society

6. Where small-scale tests are used for product testing (batch release testing), these test methods are to be approved by the Classification Society in accordance with Annex 5 of this UR.

7. Lower thicknesses may be approved at the discretion of the Classification Society.

W31 (cont)

Table 4 Chemical composition and deoxidation practice for brittle crack arrest steels

Grade	EH36-BCA	EH40-BCA	EH47-BCA
Deoxidation Practice	Killed and fine grain treated		
Chemical Composition % (1)(7)(8) (ladle samples)			
C max.	0.18		0.18
Mn	0.90 – 2.00		0.90 – 2.00
Si max.	0.50		0.55
P max.	0.020		0.020
S max.	0.020		0.020
Al (acid soluble min)	0.015 (2) (3)		0.015 (2) (3)
Nb	0.02 – 0.05 (3) (4)		0.02 – 0.05 (3) (4)
V	0.05 – 0.10 (3) (4)		0.05 – 0.10 (3) (4)
Ti max.	0.02(4)		0.02(4)
Cu max.	0.50		0.50
Cr max.	0.25		0.50
Ni max.	2.0		2.0
Mo max.	0.08		0.08
C_{eq} max.(5)	0.47	0.49	0.55
P_{cm} max.(6)	-		0.24

Notes:

1. Chemical composition of brittle crack arrest steels shall comply with Table 4 of this UR, regardless of chemical composition specified in UR W11 and Table 1 of this UR.

2. The total aluminium content may be determined instead of the acid soluble content. In such cases the total aluminium content is to be not less than 0.020%.

3. The steel is to contain aluminium, niobium, vanadium or other suitable grain refining elements, either singly or in any combination. When used singly the steel is to contain the specified minimum content of the grain refining element. When used in combination, the specified minimum content of a fine graining element is not applicable.

4. The total niobium, vanadium and titanium content is not to exceed 0.12%.

5. The carbon equivalent C_{eq} value is to be calculated from the ladle analysis using the following formula:
$$C_{eq} = C + \frac{Mn}{6} + \frac{Cr + Mo + V}{5} + \frac{Ni + Cu}{15} (\%)$$

6. Cold cracking susceptibility P_{cm} value is to be calculated using the following formula:
$$P_{cm} = C + \frac{Si}{30} + \frac{Mn}{20} + \frac{Cu}{20} + \frac{Ni}{60} + \frac{Cr}{20} + \frac{Mo}{15} + \frac{V}{10} + 5B(\%)$$

7. Where additions of any other element have been made as part of the steelmaking practice subject to approval by the Classification Society, the content is to be indicated on product inspection certificate.

8. Variations in the specified chemical composition may be allowed subject to approval of Classification Society.

W31
(cont)

3 Manufacturing approval scheme

3.1 YP47 steels

Manufacturing approval scheme for YP47 steels is to be in accordance with Annex 1 of this UR.

3.2 Brittle crack arrest steels

Manufacturing approval scheme for brittle crack arrest steels is to be in accordance with Annex 2 of this UR.

4 Welding procedure qualification test

4.1 YP47 steels

4.1.1 General

Approval test items, test methods and acceptance criteria not specified in this UR are to be in accordance with the Classification Society's procedures.

4.1.2 Approval range

UR W28 is to be followed for approval range.

4.1.3 Impact test

UR W28 is to be followed for impact test. 64J at -20℃ is to be satisfied.

4.1.4 Hardness

HV10, as defined in UR W28, is to be not more than 350. Measurement points are to include mid-thickness position in addition to the points required by UR W28.

4.1.5 Tensile test

Tensile strength in transverse tensile test is to be not less than 570N/mm^2.

4.1.6 Brittle fracture initiation test

Deep notch test or CTOD test may be required.

Test method and acceptance criteria are to be considered appropriate by the Classification Society.

4.2 Brittle crack arrest steels

4.2.1 General

Where Welding Procedure Specification (WPS) for the non-BCA steels has been approved by the Classification Society, the said WPS is applicable to the same welding procedure applied to the same grade with suffix "BCA1" or "BCA2" specified in Table 3 of this UR except high heat input processes over 50kJ/cm.

W31 (cont)

The requirements for welding procedure qualification test for brittle crack arrest steels is to be in accordance with the relevant requirements for each steel grade excluding suffix “BCA1” or “BCA2” specified in Table 3 of this UR, except for 4.2.2 below.

4.2.2 Hardness

For YP47 steels with brittle crack arrest properties, HV10, as defined in UR W28, is to be not more than 380, and measurement points are to include mid-thickness position in addition to the points required by UR W28.

5 Production welding

5.1 YP47 steels

5.1.1 Welder

Welders engaged in YP47 welding work are to possess welder’s qualifications specified in UR W32.

5.1.2 Short bead

Short bead length for tack and repairs of welds by welding are not to be less than 50mm.

In the case where P_{cm} is less than or equal to 0.19, 25mm of short bead length may be adopted with approval of the Classification Society.

5.1.3 Preheating

Preheating is to be 50℃ or over when air temperature is 5℃or below.

In the case where P_{cm} is less than or equal to 0.19 and the air temperature is below 5℃ but above 0℃, alternative preheating requirements may be adopted with approval of the Classification Society.

5.1.4 Welding consumables

Approval procedure, approval test items, test methods and acceptance criteria not specified in this UR are to be in accordance with UR W17.

Specifications of welding consumables for YP47 steel plates are to be in accordance with Table 5.

Table 5 Mechanical properties for deposited metal tests for welding consumables

Mechanical Properties			Impact test	
Yield Strength (N/mm^2) min.	Tensile Strength (N/mm^2)	Elongation (%) min.	Test Temp. (℃)	Average Impact Energy (J) min.
460	570 - 720	19	-20	64

W31 (cont)

Consumables tests for butt weld assemblies are to be in accordance with Table 6.

Table 6 Mechanical properties for butt weld tests for welding consumables

Tensile strength (N/mm^2)	Bend test ratio: $\frac{D}{t}$	Charpy V-notch impact tests	
		Test temperature (℃)	Average absorbed energy (J) min.
570 - 720	4	- 20	64

5.1.5 Others

Special care is to be paid to the final welding so that harmful defects do not remain.

Jig mountings are to be completely removed with no defects in general, otherwise the treatment of the mounting is to be accepted by the Classification Society.

5.2 Brittle crack arrest steels

Welding work (such as relevant welder's qualification, short bead, preheating, selection of welding consumables, etc.) for brittle crack arrest steels is to be in accordance with the relevant requirements for each steel grade excluding suffix "BCA1" or "BCA2" specified in Table 3 of this UR.

W31
(cont)

Annex 1 Manufacturing Approval Scheme for YP47 Steels

A1.1. Scope

A1.1.1 This Annex specifies, as given in 3.1 of this UR, the manufacturing approval scheme for YP47 steels of grade EH47.

A1.1.2 Unless otherwise specified in this Annex, Appendix A2 of UR W11 is to be followed.

A1.2. Approval tests

A1.2.1 Extent of the approval tests

A1.2.1.1 3.1 (c) and (d), Appendix A2 of UR W11 are not applied to manufacturing approval of YP47 steels.

A1.2.1.2 The products for testing are to represent the maximum thickness for approval. If the target chemical composition changes with the thickness, the maximum thickness for each specified chemical composition specification shall be tested.

A1.2.2 Type of tests

A1.2.2.1 Brittle fracture initiation test

Deep notch test or Crack Tip Opening Displacement (CTOD) test is to be carried out. Test method is to be in accordance with the Classification Society's practice.

A1.2.2.2 Weldability test

(a) Y-groove weld cracking test (Hydrogen crack test)

The test method is to be in accordance with recognized national standards such as ISO 17642-2:2005. Acceptance criteria are to be in accordance with the Classification Society's practice.

(b) Brittle fracture initiation test

Deep notch test or CTOD test is to be carried out. Test method and results are to be considered appropriate by the Classification Society.

A1.2.2.3 Other tests

In addition to the requirement specified in A1.2.2.1 and A1.2.2.2 above, the approval tests required for steels specified in Appendix A2 of UR W11 are to be carried out. Additional tests may be required when deemed necessary by the Classification Society.

W31
(cont)

Annex 2 Manufacturing Approval Scheme for Brittle Crack Arrest Steels

A2.1. Scope

A2.1.1 This Annex specifies, as given in 3.2 of this UR, the manufacturing approval scheme for brittle crack arrest steels.

A2.1.2 Unless otherwise specified in this Annex, Appendix A2 of UR W11 and/or Annex1 of this UR are to be followed.

A2.2. Approval Application

A2.2.1 Documents to be submitted

The manufacturer is to submit to the Classification Society the following documents together with those required in 2.1, Appendix A2 of UR W11:

a) In-house test reports of the brittle crack arrest properties of the steels intended for approval
b) Approval test program for the brittle crack arrest properties (see A2.3.1 below)
c) Production test procedure for the brittle crack arrest properties.

A2.3. Approval tests

A2.3.1 Extent of the approval tests

A2.3.1.1 The extent of the test program is specified in A2.3.2, A2.3.3 and A2.3.4 of this Annex. If the manufacturing process and mechanism to ensure the brittle crack arrest properties for the steels intended for approval are same, 3.1, Appendix A2 of UR W11 is to be followed for the extent of the approval tests. For YP47 steels with brittle crack arrest properties, 3.1 (c) and (d), Appendix A2 of UR W11 are not applied.

A2.3.1.2 The products for testing are to represent the maximum thickness for approval. If the target chemical composition changes with the thickness, the maximum thickness for each specified chemical composition specification shall be tested.

A2.3.1.3 The number of test samples and test specimens may be increased when deemed necessary by the Classification Society, based on the in-house test reports of the brittle crack arrest properties of the steels intended for approval specified in A2.2.1 a).

A2.3.2 Type of tests

A2.3.2.1 Brittle crack arrest tests are to be carried out in accordance with A2.3.3 of this Annex in addition to the approval tests specified in Appendix A2 of UR W11 and/or Annex 1 of this UR.

A2.3.2.2 In the case of applying for addition of the specified brittle crack arrest properties for YP36, YP40 and YP47 steels of which, manufacturing process has been approved by the Classification Society (i.e. The aim analyses and method of manufacture are similar and the steelmaking process, deoxidation and fine grain practice, casting method and condition of supply are the same), brittle crack arrest tests, chemical analyses, tensile test and Charpy V-notch impact test are to be carried out in accordance with Annex 2 of this UR and Appendix A2 of UR W11.

W31
(cont)

A2.3.3 Test specimens and testing procedure of brittle crack arrest tests

A2.3.3.1 The test specimens of the brittle crack arrest tests are to be taken with their longitudinal axis parallel to the final rolling direction of the test plates.

A2.3.3.2 The loading direction of brittle crack tests is to be parallel to the final rolling direction of the test plates.

A2.3.3.3 The thickness of the test specimens of the brittle crack arrest tests is to be the full thickness of the test plates.

A2.3.3.4 The test specimens and repeat test specimens are to be taken from the same steel plate. Where the brittle crack arrest properties are evaluated by K_{ca}, and the brittle crack arrest test result fails to meet the requirement, further brittle crack arrest tests may be carried out. In this case, the judgment of acceptance is to be made on the arrest toughness value K_{ca} of all test specimens (results of the initial test, failed tests and additional tests shall be included in the testing report.).

A2.3.3.5 The thickness of the test specimen is to be the maximum thickness of the steel plate requested for approval.

A2.3.3.6 In the case where the brittle crack arrest properties are evaluated by K_{ca}, the brittle crack arrest test method is to be in accordance with Annex 3 of this UR. In the case where the brittle crack arrest properties are evaluated by CAT, the test method is to be in accordance with Annex 4 of this UR.

A2.3.4 Other tests

Additional tests may be required when deemed necessary by the Classification Society in addition to the tests specified in A2.3.3.

A2.4. Results

Appendix A2 of UR W11 is to be followed for the results. Additionally, results of test items and the procedures shall comply with the test program approved by the Classification Society. In the case where the brittle crack arrest properties are evaluated by K_{ca} or CAT, the manufacturer also is to submit to the Classification Society the brittle crack arrest test reports in accordance with Annex 3 for Kca and Annex 4 for CAT of this UR.

A2.5. Approval and Certification

Upon satisfactory completion of the survey and tests, approval is granted by the Classification Society with the grade designation having the suffix “BCA1” or “BCA2” (e.g. EH40-BCA1, EH47-BCA1, EH47-BCA2, etc.).

A2.6. Renewal of approval

The manufacturer is also to submit to the Classification Society actual manufacturing records of the approved brittle crack arrest steels within the term of validity of the manufacturing approval certificate.

Note: Chemical composition, mechanical properties, brittle crack arrest properties (e.g. brittle crack arrest test results or small-scale test results) and nominal thickness are to be described in the form of histogram or statistics.

W31 (cont)

Annex 3 Test Method for Brittle Crack Arrest Toughness, K_{ca}

A3.1. Scope

ISO20064: 2019 provides a test method for the determination of brittle crack arrest toughness of steel by using wide plates with a temperature gradient.
This Annex 3 specifies the test procedures for brittle crack arrest toughness (i.e. K_{ca}) of steel using fracture mechanics parameter and determination method of K_{ca} at a specific temperature which are specified in ISO 20064:2019. Additionally, this Annex 3 specifies the evaluation method of K_{ca} of test plate. This Annex 3 is applicable to hull structural steels with the thickness over 50mm and not greater than 100mm specified in UR W11 or this UR.

A3.2. Test Procedures

The test procedures including testing equipment, test specimens, test methods, determination of arrest toughness, reporting of test results, etc. are to be in accordance with ISO 20064: 2019. As a method for initiating a brittle crack, a secondary loading mechanism can be used in accordance with Annex D of ISO 20064: 2019, except that the first sentence in Annex B.2.4 of ISO 20064: 2019 is revised to "Obtain the value $\{K_{ca} /[K_0 *\exp(-c/T_{caK})]\}$ for each data point".

A3.3. Determination of K_{ca} at a specific temperature and the evaluation

A3.3.1 Method

The method for conducting multiple tests to obtain Kca value at a specific temperature is to be in accordance with Annex B of ISO 20064: 2019.

A3.3.2 Evaluation

The straight-line approximation of Arrhenius plot for valid K_{ca} data by interpolation method are to comply with either the following (1) or (2):

(1) The evaluation temperature of K_{ca} (i.e. - 10 degree C) is located between the upper and lower limits of the arrest temperature, with the K_{ca} corresponding to the evaluation temperature not lower than the required K_{ca} (e.g. 6,000 N/mm$^{3/2}$ or 8,000 N/mm$^{3/2}$), as shown in Fig. A3-1.

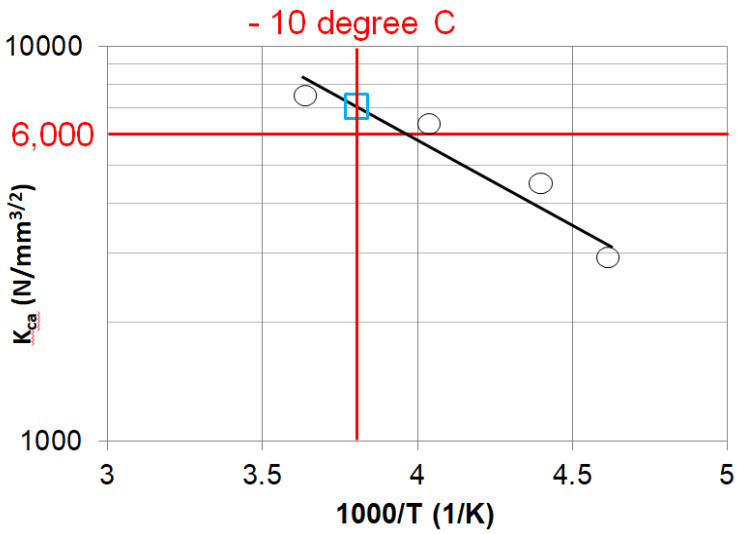

Fig. A3-1 Example for evaluation of K_{ca} at - 10 degree C

W31 (cont)

(2) The temperature corresponding to the required K_{ca} (e.g. 6,000 N/mm$^{3/2}$ or 8,000 N/mm$^{3/2)}$ is located between the upper and lower limits of the arrest temperature, with the temperature corresponding to the required K_{ca} not higher than the evaluation temperature (i.e. -10 degree C), as shown in Fig. A3-2.

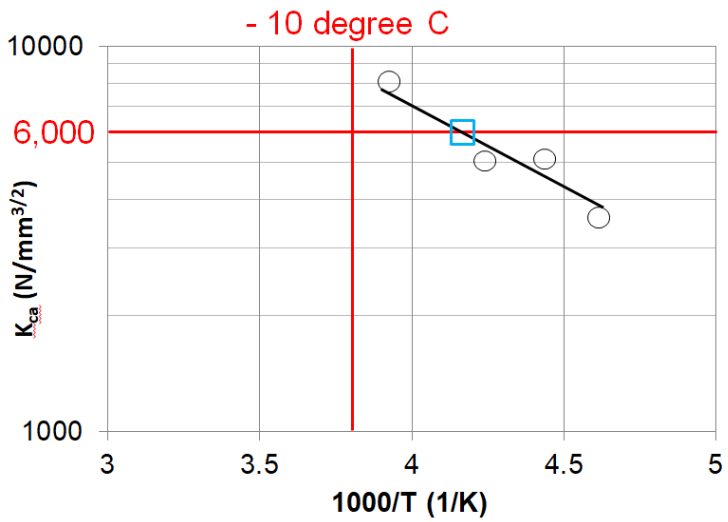

Fig. A3-2 Example for evaluation of temperature corresponding to the required K_{ca}

If both of (1) and (2) above are not satisfied, conduct additional tests to satisfy this condition.

W31
(cont)

Annex 4 Outline of requirements for undertaking isothermal Crack Arrest Temperature (CAT) test

A4.1 Scope of application

A4.1.1 Annex 4 is to be applied according to the scope defined in UR W31.

A4.1.2 Annex 4 specifies the requirements for test procedures and test conditions when using the isothermal crack arrest test to determine a valid test result under isothermal conditions and in order to establish the crack arrest temperature (CAT). Annex 4 is applicable to steels with thickness over 50mm and not greater than 100mm.

A4.1.3 This method uses an isothermal temperature in the test specimen being evaluated. Unless otherwise specified in this Annex 4, the other test parameters are to be in accordance with ISO 20064: 2019.

A4.1.4 Table 3 of UR W31 gives the relevant requirements for the brittle crack arrest property described by the crack arrest temperature (CAT).

A4.1.5 The manufacturer is to submit the test procedure to the Classification Society for review prior to testing.

A4.2 Symbols and their significance

A4.2.1 Table A4-1 supplements Table 1 in ISO 20064: 2019 with specific symbols for the isothermal test.

W31
(cont)

Table A4-1 Nomenclature supplementary to Table 1 in ISO 20064: 2019

Symbol	Unit	Significance
t	mm	Test specimen thickness
L	mm	Test specimen length
W	mm	Test specimen width
a_{MN}	mm	Machined notch length on specimen edge
L_{SG}	mm	Side groove length on side surface from the specimen edge. L_{SG} is defined as a groove length with constant depth except a curved section in depth at side groove end.
d_{SG}	mm	Side groove depth in section with constant depth
$L_{EB\text{ - }min}$	mm	Minimum length between specimen edge and electron beam re-melting zone front
$L_{EB\text{-}s1,\ \text{-}s2}$	mm	Length between specimen edge and electron beam re-melting zone front appeared on both specimen side surfaces
L_{LTG}	mm	Local temperature gradient zone length for brittle crack runway
a_{arrest}	mm	Arrested crack length
T_{target}	℃	Target test temperature
T_{test}	℃	Defined test temperature
T_{arrest}	℃	Target test temperature at which valid brittle crack arrest behaviour is observed
σ	N/mm^2	Applied test stress at cross section of W x t
SMYS	N/mm^2	Specified minimum yield strength of the tested steel grade to be approved
CAT	℃	Crack arrest temperature, the lowest temperature, T_{arrest}, at which running brittle crack is arrested

A4.3 Testing equipment

A4.3.1 The test equipment to be used is to be of the hydraulic type of sufficient capacity to provide a tensile load equivalent to ⅔ of SMYS of the steel grade to be approved.

A4.3.2 The temperature control system is to be equipped to maintain the temperature in the specified region of the specimen within ±2℃ from T_{target}.

A4.3.3 Methods for initiating the brittle crack may be of drop weight type, air gun type or double tension tab plate type.

A4.3.4 The detailed requirements for testing equipment are to be in accordance with ISO 20064: 2019.

A4.4 Test specimens

A4.4.1 Impact type crack initiation

A4.4.1.1 Test specimens are to be in accordance with ISO 20064: 2019, unless otherwise specified in this Annex.

A4.4.1.2 Specimen dimensions are shown in Figure A4-1. The test specimen width, W shall be 500mm. The test specimen length, L shall be equal to or greater than 500mm.

W31 (cont)

A4.4.1.3 V-shape notch for brittle crack initiation is machined on the specimen edge of the impact side. The whole machined notch length shall be equal to 29mm with a tolerance range of ±1mm.

A4.4.1.4 Requirements for side grooves are described in A4.4.4.

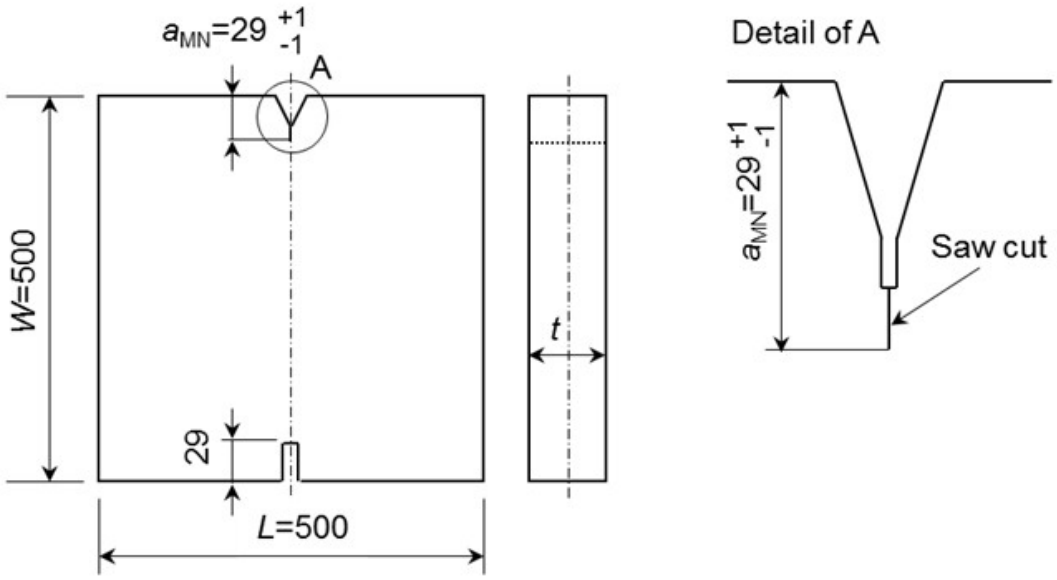

Figure A4-1 Test specimen dimensions for an impact type specimen

NOTE: Saw cut notch radius may be machined in the range 0.1mmR and 1mmR in order to control a brittle crack initiation at test.

A4.4.2 Double tension type crack initiation

A4.4.2.1 Reference shall be made to Annex D in ISO 20064: 2019 for the shape and sizes in secondary loading tab and secondary loading method for brittle crack initiation.

A4.4.2.2 In a double tension type test, the secondary loading tab plate may be subject to further cooling to enhance an easy brittle crack initiation.

A4.4.3 Embrittled zone setting

A4.4.3.1 An embrittled zone shall be applied to ensure the initiation of a running brittle crack. Either Electron Beam Welding (EBW) or Local Temperature Gradient (LTG) may be adopted to facilitate the embrittled zone.

A4.4.3.2 In EBW embrittlement, electron beam welding is applied along the expected initial crack propagation path, which is the centre line of the specimen in front of the machined V-notch.

A4.4.3.3 The complete penetration through the specimen thickness is required along the embrittled zone. One side EBW penetration is preferable, but dual sides EB penetration may be also adopted when the EBW power is not enough to achieve the complete penetration by one side EBW.

A4.4.3.4 The EBW embrittlement is recommended to be prepared before specimen contour machining.

W31 (cont)

A4.4.3.5 In EBW embrittlement, zone shall be of an appropriate quality.

Note: EBW occasionally behaves in an un-stable manner at start and end points. EBW line is recommended to start from the embrittled zone tip side to the specimen edge with an increasing power control or go/return manner at start point to keep the stable EBW.

A4.4.3.6 In LTG system, the specified local temperature gradient between machined notch tip and isothermal test region is regulated after isothermal temperature control. LTG temperature control is to be achieved just before brittle crack initiation, nevertheless the steady temperature gradient through the thickness shall be ensured.

A4.4.4 Side grooves

A4.4.4.1 Side grooves on side surface can be machined along the embrittled zone to keep brittle crack propagation straight. Side grooves shall be machined in the specified cases as specified in this section.

A4.4.4.2 In EBW embrittlement, side grooves are not necessarily mandatory. Use of EBW avoids the shear lips. However, when shear lips are evident on the fractured specimen, e.g. shear lips over 1mm in thickness in either side then side grooves should be machined to suppress the shear lips.

A4.4.4.3 In LTG embrittlement, side grooves are mandatory. Side grooves with the same shape and size shall be machined on both side surfaces.

A4.4.4.4 The length of side groove, L_{SG} shall be no shorter than the sum of the required embrittled zone length.

A4.4.4.5 When side grooves would be introduced, the side groove depth, the tip radius and the open angle are not regulated, but are adequately selected in order to avoid any shear lips over 1mm thickness in either side. An example of side groove dimensions are shown in Figure A4-2.

A4.4.4.6 Side groove end shall be machined to make a groove depth gradually shallow with a curvature larger than or equal to groove depth, d_{SG}. Side groove length, L_{SG} is defined as a groove length with constant depth except a curved section in depth at side groove end.

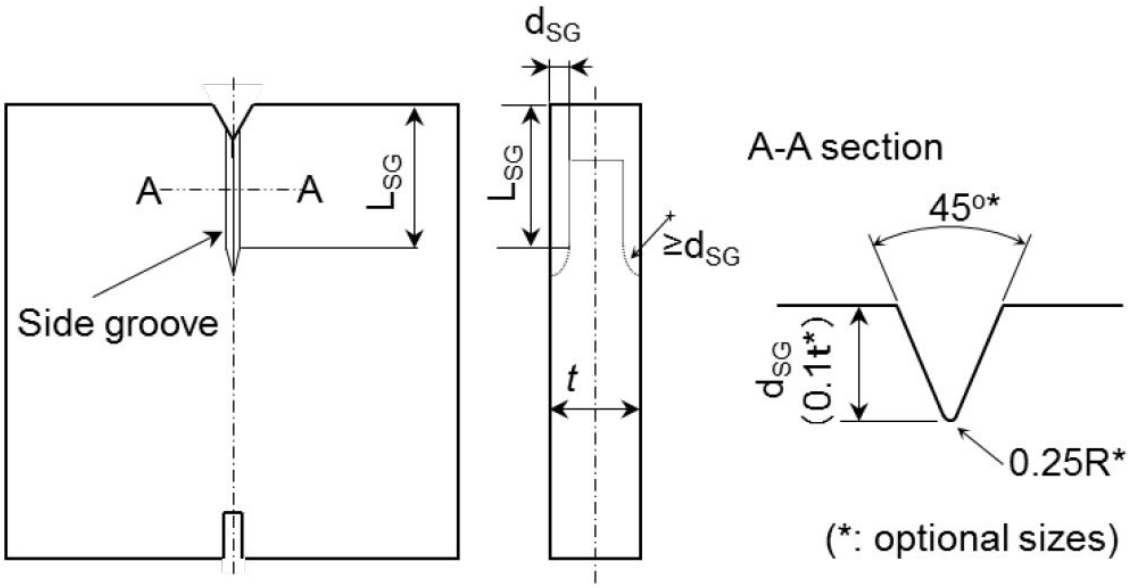

W31 (cont)

Figure A4-2 Side groove configuration and dimensions

A4.4.5 Nominal length of embrittled zone

A4.4.5.1 The length of embrittled zone shall be at least 150mm.

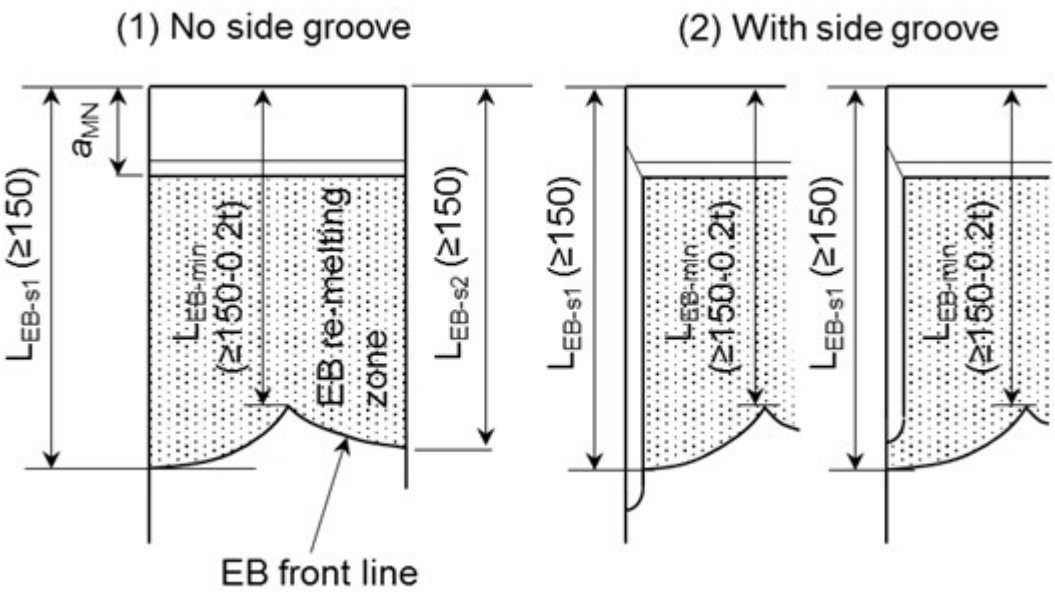

Figure A4-3 Definition of EBW length

A4.4.5.2 EBW zone length is regulated by three measurements on the fracture surface after test as shown in Figure A4-3, L_{EB-min} between specimen edge and EBW front line, and L_{EB-s1} and L_{EB-s2}.

A4.4.5.3 The minimum length between specimen edge and EBW front line, L_{EB-min} should be no smaller than 150mm. However, it can be acceptable even if L_{EB-min} is no smaller than 150mm-0.2*t*, where *t* is specimen thickness. When L_{EB-min} is smaller than 150mm, a temperature safety margin shall be considered into T_{test} (See A4.8.1.2).
A4.4.5.4 Another two are the lengths between specimen edge and EBW front appeared on both side surfaces, as denoted with L_{EB-s1} and L_{EB-s2}. Both of L_{EB-s1} and L_{EB-s2} shall be no smaller than 150mm.

A4.4.5.5 In LTG system, L_{LTG} is set as 150mm.

A4.4.6 Tab plate / pin chuck details and welding of test specimen to tab plates

A4.4.6.1 The configuration and size of tab plates and pin chucks shall be referred to ISO 20064: 2019. The welding distortion in the integrated specimen, which is welded with specimen, tab plates and pin chucks, shall be also within the requirement in ISO 20064: 2019.

W31 (cont)

A4.5 Test method

A4.5.1 Preloading

A4.5.1.1 Preloading at room temperature can be applied to avoid unexpected brittle crack initiation at test. The applied load value shall be no greater than the test stress. Preloading can be applied at higher temperature than ambient temperature when brittle crack initiation is expected at preloading process. However, the specimen shall not be subjected to temperature higher than 100℃.

A4.5.2 Temperature measurement and control

A4.5.2.1 Temperature control plan showing the number and position of thermocouples is to be in accordance with this section.

A4.5.2.2 Thermocouples are to be attached to both sides of the test specimen at a maximum interval of 50mm in the whole width and in the longitudinal direction at the test specimen centre position (0.5 *W*) within the range of ±100mm from the centreline in the longitudinal direction, refer to Figure A4-4.

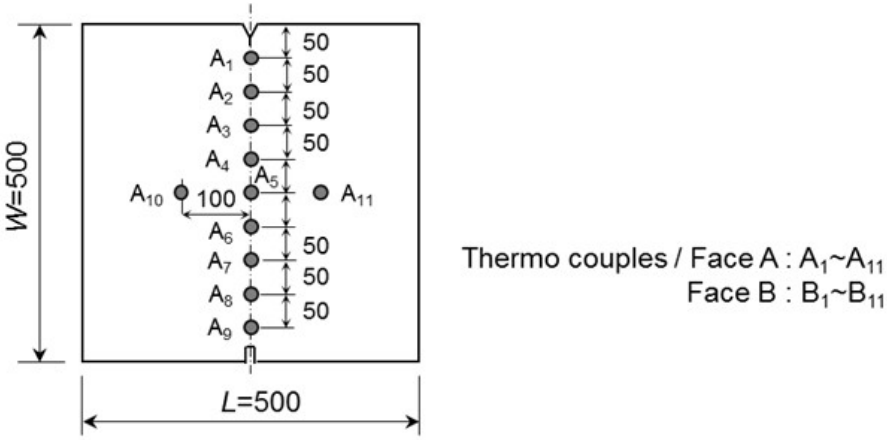

Figure A4-4 Locations of temperature measurement

A4.5.2.3 For EBW embrittlement

A4.5.2.3.1 The temperatures of the thermocouples across the range of 0.3*W*~0.7*W* in both width and longitudinal directions are to be controlled within ± 2℃ of the target test temperature, T_{target}.
A4.5.2.3.2 When all measured temperatures across the range of 0.3*W*~0.7*W* have reached T_{target}, steady temperature control shall be kept at least for 10 + 0.1 x *t* [mm] minutes to ensure a uniform temperature distribution into mid-thickness prior to applying test load.

A4.5.2.3.3 The machined notch tip can be locally cooled to easily initiate brittle crack. Nevertheless, the local cooling shall not disturb the steady temperature control across the range of 0.3*W*~0.7*W*.

A4.5.2.4 For LTG embrittlement:

A4.5.2.4.1 In LTG system, in addition to the temperature measurements shown in Figure A4-4, the additional temperature measurement at the machine notch tip, A_0 and B_0 is required. Thermocouples positions within LTG zone are shown in Figure A4-5.

W31
(cont)

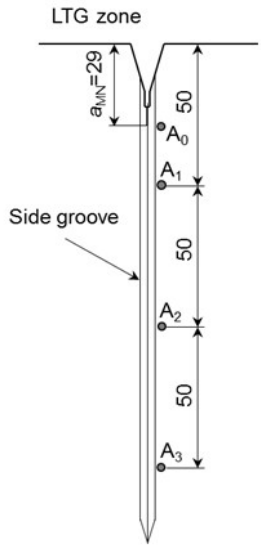

Figure A4-5 Detail of LTG zone and additional thermocouple A_0

A4.5.2.4.2 The temperatures of the thermocouples across the range of 0.3*W*~0.7*W* in both width and longitudinal directions are to be controlled within ± 2℃of the target test temperature, T_{target}. However, the temperature measurement at 0.3*W* (location of A_3 and B_3) shall be in accordance with A4.5.2.4.6 below.

A4.5.2.4.3 Once the all measured temperatures across the range of 0.3*W*~0.7*W* have reached T_{target}, steady temperature control shall be kept at least for 10 + 0.1 x *t* [mm] minutes to ensure a uniform temperature distribution into mid-thickness, then the test load is applied.

A4.5.2.4.4 LTG is controlled by local cooling around the machined notch tip. LTG profile shall be recorded by the temperature measurements from A_0 to A_3 shown in Figure A4-6.

A4.5.2.4.5 LTG zone is established by temperature gradients in three zones, Zone I, Zone II and Zone III. The acceptable range for each temperature gradient is listed Table A4-2.

A4.5.2.4.6 Temperature measurements at A_2, B_2 and A_3, B_3 shall be satisfied the following requirements:

T at A_3, T at $B_3 < T_{target} - 2$℃

T at $A_2 < T$ at $A_3 - 5$°C

T at $B_2 < T$ at $B_3 - 5$°C

A4.5.2.4.7 No requirements for T at A_0 and T at A_1 temperatures when T at A_3 and T at A_2 satisfy the requirements above. Face B is the same.

A4.5.2.4.8 The temperatures from A_0, B_0 to A_3, B_3 should be decided at test planning stage refer to Table A4-2 which gives the recommended temperature gradients in three zones, Zone I, Zone II and Zone III in LTG zone.

W31
(cont)

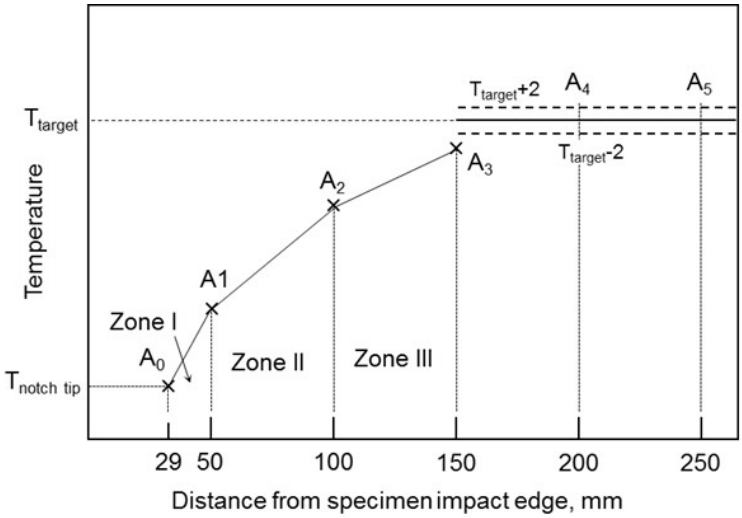

Figure A4-6 Schematic temperature gradient profile in LTG zone

Table A4-2 Acceptable LTG range

Zone	Location from edge	Acceptable range of temperature gradient
Zone I	29mm – 50mm	2.00 ℃/mm – 2.30 ℃/mm
Zone II	50mm – 100mm	0.25 ℃/mm – 0.60 ℃/mm
Zone III[1)]	100mm – 150mm	0.10 ℃/mm – 0.20 ℃/mm

Note 1: The Zone III arrangement is mandatory

A4.5.2.4.9 The temperature profile in LTG zone mentioned above shall be ensured after holding time at least for 10 + 0.1 x *t* [mm] minutes to ensure a uniform temperature distribution into mid-thickness before brittle crack initiation.

A4.5.2.4.10 The acceptance of LTG in the test shall be decided from Table A4-2 based on the measured temperatures from A_0 to A_3.

A4.5.2.5 For double tension type crack initiation specimen:

A4.5.2.5.1 Temperature control and holding time at steady state shall be the same as the case of EBW embrittlement specified in 5.2.3 or the case of LTG embrittlement specified in Section A4.5.2.4.

A4.5.3 Loading and brittle crack initiation

A4.5.3.1 Prior to testing, a target test temperature (T_{target}) shall be selected.

A4.5.3.2 Test procedures are to be in accordance with ISO 20064: 2019 except that the applied stress is to be ⅔ of SMYS of the steel grade tested.

A4.5.3.3 The test load shall be held at the test target load or higher for a minimum of 30 seconds prior to crack initiation.

A4.5.3.4 Brittle crack can be initiated by impact or secondary tab plate tension after all of the temperature measurements and the applied force are recorded.

W31 (cont)

A4.6 Measurements after test and test validation judgement

A4.6.1 Brittle crack initiation and validation

A4.6.1.1 If brittle crack spontaneously initiates before the test force is achieved or the specified hold time at the test force is not achieved, the test shall be invalid.

A4.6.1.2 If brittle crack spontaneously initiates without impact or secondary tab tension but after the specified time at the test force is achieved, the test is considered as a valid initiation. The following validation judgments of crack path and fracture appearance shall be examined.

A4.6.2 Crack path examination and validation

A4.6.2.1 When brittle crack path in embrittled zone deviates from EBW line or side groove in LTG system due to crack deflection and/or crack branching, the test shall be considered as invalid.

A4.6.2.2 All of the crack path from embrittled zone end shall be within the range shown in Figure A4-7. If not, the test shall be considered as invalid.

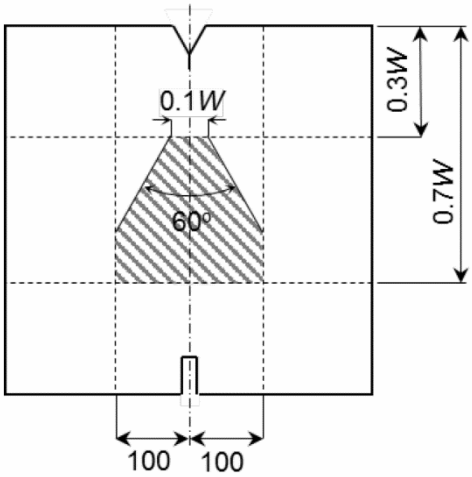

Figure A4-7 Allowable range of main crack propagation path

A4.6.3 Fracture surface examination, crack length measurement and their validation

A4.6.3.1 Fracture surface shall be observed and examined. The crack “initiation” and “propagation” are to be checked for validity and judgements recorded. The crack “arrest” positions are to be measured and recorded.

A.4.6.3.2 When crack initiation trigger point is clearly detected at side groove root, other than the V-notch tip, the test shall be invalid.

A4.6.3.3 In EBW embrittlement setting, EBW zone length is quantified by three measurements of $L_{EB\text{-}s1}$, $L_{EB\text{-}s2}$ and $L_{EB\text{-}min}$, which are defined in A4.4.5. When either or both of $L_{EB\text{-}s1}$ and $L_{EB\text{-}s2}$ are smaller than 150mm, the test shall be invalid. When $L_{EB\text{-}min}$ is smaller than 150mm-0.2t, the test shall be invalid.

A4.6.3.4 When the shear lip with thickness over 1mm in either side near side surfaces of embrittled zone are visibly observed independent of the specimens with or without side grooves, the test shall be invalid.

W31 (cont)

A4.6.3.5 In EBW embrittlement setting, the penetration of brittle crack beyond the EBW front line shall be visually examined. When any brittle fracture appearance area continued from the EB front line is not detected, the test shall be invalid.

A4.6.3.6 The weld defects in EBW embrittled zone shall be visually examined. If detected, it shall be quantified. A projecting length of defect on the thickness line through EB weld region along brittle crack path shall be measured, and the total occupation ratio of the projected defect part to the total thickness is defined as defect line fraction (See Figure A4-8). When the defects line fraction is larger than 10 %, the test shall be invalid.

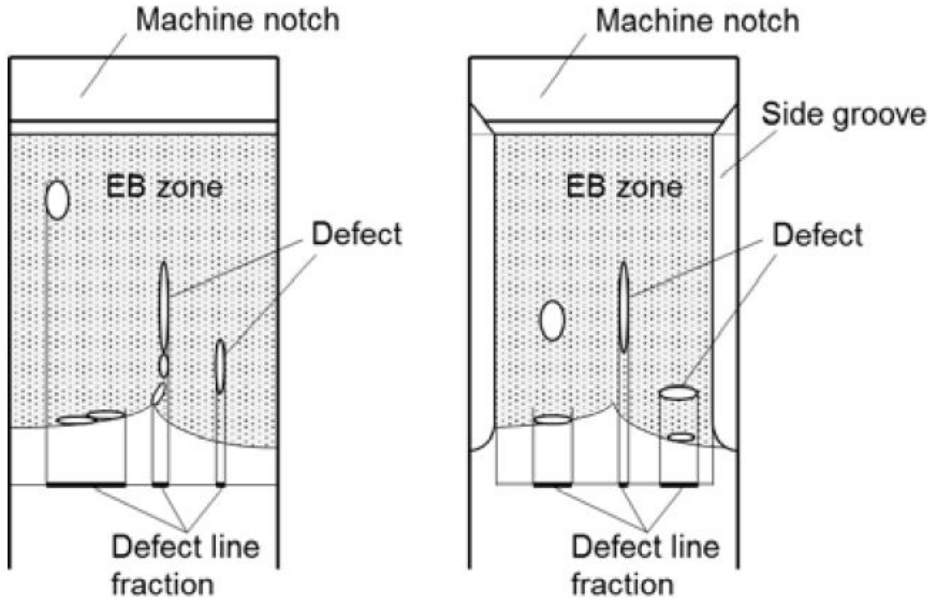

Fig. A4-8 Counting procedure of defect line fraction

A4.6.3.7 In EBW embrittlement by dual sides' penetration, a gap on embrittled zone fracture surface which is induced by miss meeting of dual fusion lines is visibly detected at an overlapped line of dual side penetration, the test shall be invalid.

A4.7 Judgement of "arrest" or "propagate"

A4.7.1 The final test judgment of "arrest", "propagate" or "invalid" is decided by the following requirements of A4.7.2 through A4.7.6.

A4.7.2 If initiated brittle crack is arrested and the tested specimen is not broken into two pieces, the fracture surfaces should be exposed with the procedures specified in ISO 20064: 2019.

A4.7.3 When the specimen was not broken into two pieces during testing, the arrested crack length, a_{arrest} shall be measured on the fractured surfaces. The length from the specimen edge of impact side to the arrested crack tip (the longest position) is defined as a_{arrest}.

A4.7.4 For LTG and EBW, a_{arrest} shall be greater than L_{LTG} and $L_{EB\text{-}s1}$, $L_{EB\text{-}s2}$ or $L_{EB\text{-}min}$. If not, the test shall be considered as invalid.

A4.7.5 Even when the specimen was broken into two pieces during testing, it can be considered as "arrest" when brittle crack re-initiation is clearly evident. Even in the fracture

W31 (cont)

surface all occupied by brittle fracture, when a part of brittle crack surface from embrittled zone is continuously surrounded by thin ductile tear line, the test can be judged as re-initiation behaviour. If so, the maximum crack length of the part surrounded tear line can be measured as a_{arrest}. If re-initiation is not visibly evident, the test is judged as "propagate".

A4.7.6 The test is judged as "arrest" when the value of a_{arrest} is no greater than 0.7*W*. If not, the test is judged as "propagate".

A4.8 T_{test}, T_{arrest} and CAT determination

A4.8.1 T_{test} determination

A4.8.1.1 It shall be ensured on the thermocouple measured record that all temperature measurements across the range of 0.3*W* ~ 0.7*W* in both width and longitudinal direction are in the range of T_{target} ±2℃ at brittle crack initiation. If not, the test shall be invalid. However, the temperature measurement at 0.3*W* (location of A_3 and B_3) in LTG system shall be exempted from this requirement.

A4.8.1.2 If $L_{EB\text{-}min}$ in EBW embrittlement is no smaller than 150mm, T_{test} can be defined to equal with T_{target}. If not, T_{test} shall be equaled with T_{target} + 5℃.

A4.8.1.3 In LTG embrittlement, T_{test} can be equaled with T_{target}.

A4.8.1.4 The final arrest judgment at T_{test} is concluded by at least two tests at the same test condition which are judged as "arrest".

A4.8.2 T_{arrest} determination

A4.8.2.1 When at least repeated two "arrest" tests appear at the same T_{target}, brittle crack arrest behaviour at T_{target} will be decided (T_{arrest} = T_{target}).When a "propagate" test result is included in the multiple test results at the same T_{target}, the T_{target} cannot to be decided as T_{arrest}.

A4.8.3 CAT determination

A4.8.3.1 When CAT is determined, one "propagate" test is needed in addition to two "arrest" tests. The target test temperature, T_{target} for "propagate" test is recommended to select 5℃ lower than T_{arrest}. The minimum temperature of T_{arrest} is determined as CAT.

A4.8.3.2 With only the "arrest" tests, without "propagation" test, it is decided only that CAT is lower than T_{test} in the two "arrest" tests, i.e. not deterministic CAT.

A4.9 Reporting

The following items are to be reported:

(i) Test material: grade and thickness

(ii) Test machine capacity

(iii) Test specimen dimensions: thickness *t*; width *W* and length *L*; notch details and length a_{MN}, side groove details if machined;

(iv) Embrittled zone type: EBW or LTG embrittlement

W31
(cont)

(v) Integrated specimen dimensions: Tab plate thickness, tab plate width, integrated specimen unit length including the tab plates, and distance between the loading pins, angular distortion and linear misalignment

(vi) Brittle crack trigger information: impact type or double tension. If impact type, drop weight type or air gun type, and applied impact energy.

(vii) Test conditions; Applied load; preload stress, test stress
- Judgements for preload stress limit, hold time requirement under steady test stress.

(viii) Test temperature: complete temperature records with thermocouple positions for measured temperatures (figure and/or table) and target test temperature.

- Judgements for temperature scatter limit in isothermal region.

- Judgement for local temperature gradient requirements and holding time requirement after steady local temperature gradient before brittle crack trigger, if LTG system is used.

(ix) Crack path and fracture surface: tested specimen photos showing fracture surfaces on both sides and crack path side view; Mark at “embrittled zone tip” and “arrest” positions.

- Judgment for crack path requirement.

- Judgment for cleavage trigger location (whether side groove edge or V-notch edge).

(x) Embrittled zone information:

When EBW is used: $L_{EB\text{-}s1}$, $L_{EB\text{-}s2}$ and $L_{EB\text{-}min}$

- Judgement for shear lip thickness requirement

- Judgment whether brittle fracture appearance area continues from the EBW front line

- Judgement for EBW defects requirement

- Judgement for EBW lengths, $L_{EB\text{-}s1}$, $L_{EB\text{-}s2}$ *and* $L_{EB\text{-}min}$ requirements

When LTG is used: L_{LTG}

- Judgment for shear lip thickness requirement

Test results:

When the specimen did not break into two pieces after brittle crack trigger, arrested crack length a_{arrest}

When the specimen broke into two pieces after brittle crack trigger,

- judgement whether brittle crack re-initiation or not.

W31
(cont)

If so, arrested crack length a_{arrest}:

- Judgement for a_{arrest} in the valid range ($0.3W < a_{arrest} \leq 0.7W$)

- Final judgement either “arrest”, “propagate” or “invalid”

(xi) Dynamic measurement results: History of crack propagation velocity, and strain change at pin chucks, if needed

A4.10 Use of test for material qualification testing

Where required, the method can also be used for determining the lowest temperature at which a steel can arrest a running brittle crack (the determined CAT) as the material property characteristic in accordance with A4.8.3.

W31
(cont)

Annex 5 Approval Scheme of Small-scale Test Methods for Brittle Crack Arrest Steels

A5.1. Scope

A5.1.1 This Annex specifies the approval scheme of small-scale test methods which are used for product testing (batch release testing) of brittle crack arrest steels specified as Table 3 of this UR.

A5.1.2 Unless otherwise specified in this Annex, Annex 1 of this UR and/or Annex 2 of this UR are to be followed.

A5.2. Approval Application

A5.2.1 The manufacturer is to submit to the Classification Society the following documents:

a) Application for approval of small-scale test procedure specification
b) Small-scale test procedure specification including the following items at least:
   - Applicable material grades, thickness range, deoxidation practice, heat treatment, etc.
   - Types and methods of small-scale tests
   - Sampling positions in plate thickness direction and final rolling direction of test specimens
   - Size and dimension of test specimens
   - Number of test specimens
   - Test conditions, such as test temperature
   - Acceptance criterion
   - Example of format of test report
   - Example of product inspection certificate including small-scale test results
   - Handling of the products when small-scale test results do not satisfy the criterion
c) Mechanism of achieving the brittle crack arrest properties of brittle crack arrest steels
d) Technical background for enabling the evaluation of brittle crack arrest properties by small-scale test methods considering the mechanism specified in above c).
e) Procedure of the evaluation for the brittle crack arrest properties of brittle crack arrest steels by small-scale test results.
f) Data records which validate the correlation between small-scale test results and the large brittle crack arrest test results of brittle crack arrest steels whose number can satisfy the requirement for minimum data number given in A5.3.3
g) Proposed test plan for approval

A5.2.2 Small-scale test procedure specification is to be prepared in accordance with A5.3 of this Annex.

A5.2.3 Where the manufacturer proposes to change any part of the approved small-scale test procedure specification, then the manufacturer is to submit to the Classification Society the documents which can cover all items specified in Annex A5.2.1 of this UR.

A5.2.4 The documents confirming the reason for the change shall be submitted to identify the impact of those changes on the existing procedure, and the proposed actions to address any such impacts.

W31
(cont)

A5.3. Establishment of Procedure Specification for Small-scale Testing

A5.3.1 General

A5.3.1.1 Small-scale test methods are to be determined based on the manufacturer's own technical philosophy with regard to achieving the brittle crack arrest properties of brittle crack arrest steels. Furthermore, description of an appropriate correlation between large scale brittle crack arrest properties and small-scale test results is to be required, and the acceptance criterion of the small-scale test are to be determined, based on the followings:

- Mechanism of achieving the suitable brittle crack arrest properties
- Sampling position and direction
- Frequency of sampling
- Small-scale test methodology
- Demonstrated correlation between brittle crack arrest test results and small-scale test results
- Derivation of small scale testing acceptance criterion based on the statistical analysis

A5.3.1.2 The manufacturer shall prepare the small-scale test procedure specification in accordance with the following A5.3.2 through A5.3.5.

A5.3.2 Types and Methods of Testing

A5.3.2.1 Types, methods, dimension and positions as well as direction of test specimens, etc. of small-scale tests are to be specified by the manufacturer, and approved in accordance with this UR.

A5.3.2.2 In general, the test method should reproduce the crack initiation, propagation and arrest feature by such as the following test method.

- Combination of test methods, e.g. NRL drop weight test and V-notch Charpy impact test
- One test method, e.g. press-notch Charpy impact test or side-section drop weight test

A5.3.2.3 In general, brittle crack arrest properties of brittle crack arrest steels are to be predicted using a regression equation on the relationship between small scale test result (e.g. transition temperature obtained by small scale tests) and large scale brittle crack arrest test result (e.g. K_{ca} or temperature corresponding to the specific brittle crack arrest properties).

Other approaches can be used subject to the approval of the Classification Society.

NOTE: Table A5-1, Table A5-2 and Table A5-3 give the examples of small scale test methods.

A5.3.2.4 For determination of test methods, the manufacturer should confirm the applicability of these test methods to their brittle crack arrest steels theoretically taking into account the methodology of test methods, their own mechanism of achieving the brittle crack arrest properties, and sampling positions of test specimens (See A5.3.1.1). Then, the manufacturer should also submit the technical background for determination of small-scale test methods to the Classification Society as given in A5.2.1.

W31
(cont)

A5.3.3 Testing Data

A5.3.3.1 Selection of test plates

A5.3.3.1.1 Brittle crack arrest tests and small-scale tests are to be conducted for each material grade (including all suffixes) of brittle crack arrest steels in accordance with A5.3.3 of this Annex.

A5.3.3.1.2 Brittle crack arrest tests and small-scale tests are to be carried out on at least 12 test plates, in accordance with A5.3.3.1.3, by which these test results can reliably estimate brittle crack arrest properties of brittle crack arrest steels.

NOTE: "One test plate" means "the rolled product from a single slab or ingot if this is rolled directly into plates" as defined in URW11.

A5.3.3.1.3 In order to ensure appropriate correlation between small-scale test results and brittle crack arrest properties with various manufacturing conditions of steel plates, the steel plates should be representative for each combination of thickness range and heat sample to include:

- The intended maximum and minimum plate thickness;
- Different heats are to be chosen for each thickness.

Furthermore, the above test plates are to include a fixed number of steel plate(s) whose brittle crack arrest properties (i.e. brittle crack arrest test results) do not comply with the requirements specified in Table 3 of this UR. Such a number should be at least one, but not exceeding one quarter of all test plates. Manufacturing process of these test plates can be different (or intentionally altered from the approved manufacturing process) from that of the brittle crack arrest steels to which the small-scale test method is applied. It is recommended that the strength grade of these test plates (non-compliant with the relevant requirements of brittle crack arrest properties) are similar to that of the brittle crack arrest steels.

Where the manufacturer has requested approval for only a single thickness, the thickness of test plates can be only a single thickness. In this case, at least four steel plates for each combination of thickness (single thickness) and heats (three different heats) should be used, and the applicable thickness of the small scale test is only that single thickness condition.

A5.3.3.1.4 Brittle crack arrest steels used for the approval test of manufacturing process of these steels (and its approval test results) can also be used as the test plates specified in A5.3.3.1.3

A5.3.3.1.5 Brittle crack arrest test specimens and small-scale test specimens are to be taken from the same test plate.

A5.3.3.1.6 A decrease of the total of the indicated number of test plates may be accepted by the Classification Society in the following (a) or (b) cases:

(a) When the manufacturer applies a small-scale test procedure specification to multiple material grades, and the manufacturing process and mechanism to ensure the brittle crack arrest properties of these different material grades are the same.

(b) When a small-scale test procedure specification is already approved by the Classification Society for one or some material grades, and the manufacturer applies similar small-scale test procedure specification to the other material grade(s), and the manufacturing process and mechanism to ensure the brittle crack arrest properties of these different material grades are same.

W31 (cont)

A5.3.3.2 Brittle crack arrest tests

A5.3.3.2.1 Brittle crack arrest tests are to be carried out for each test plate in accordance with A2.3.3, Annex 2 of this UR.

A5.3.3.2.2 Where brittle crack arrest tests are carried out for evaluation of K_{ca}, K_{ca} at a specific temperature is to be obtained in accordance with A3.3 of Annex 3.

A5.3.3.2.3 Where brittle crack arrest tests are carried out for evaluation of CAT, deterministic (actual) CAT is to be obtained in accordance with A4.8.3 of Annex 4.

A5.3.3.3 Small-scale tests

A5.3.3.3.1 Small-scale tests are to be carried out in accordance with small-scale test procedure specification to be approved for each test plate.

A5.3.3.3.2 In general, the test specimens of small-scale tests are to be taken with their longitudinal axis parallel to the final rolling direction of the test plates.

A5.3.3.3.3 The test specimens of small-scale tests are to be taken from the specified positions in plate thickness direction of the test plates, as given in A5.3.2.3.

A5.3.4 Validation of Correlation

A5.3.4.1 A regression equation on the relationship between brittle crack arrest property obtained from brittle crack arrest test and single or multiple small-scale test results is to be established. For brittle crack arrest properties, a specific temperature (e.g. $T_{Kca6000}$ in BCA1, $T_{Kca8000}$ in BCA2 or CAT) or the K_{ca} value at -10℃ may be used.

A5.3.4.2 The validity of the regression equation shall be examined to predict brittle crack arrest properties with enough accuracy. The correlation in brittle crack arrest properties between the calculated values from small scale tests and the brittle crack arrest test results shall be assured by using the value of twice the standard deviation (2σ). When using temperature for brittle crack arrest property, 2σ shall not be greater than 20℃. In other cases (e.g. K_{ca} value at -10℃), an upper limit of 2σ shall be established with the agreement of the Classification Society.

NOTE:
Calculation procedure of the standard deviation (σ) is given as follows:

$$\sigma = \sqrt{\frac{1}{(n-1)}\sum_{i=1}^{n}(y_i - x_i)^2}$$

n: number of test plates
y_i: brittle crack arrest property obtained from brittle crack arrest test for one test plate
x_i: brittle crack arrest property estimated from small scale tests for one test plate

A5.3.5 Acceptance Criterion

A5.3.5.1 Acceptance criterion of brittle crack arrest steels by the small-scale tests is to be proposed by the manufacturer based on the regression equation which is assured in the correlation with brittle crack arrest properties in A5.3.4 above. The criterion is to be determined so that regression equation can predict brittle crack arrest properties on safety side, considering the scatter of brittle crack arrest properties from the predicted value by the regression equation.

W31 (cont)

A5.3.5.2 Unless otherwise agreed by the Classification Society, an acceptance criterion of small-scale tests is to be determined by following procedures:

(a) For correlation by means of temperature

(i) The required temperature (see Fig A5-1) is obtained by subtracting 2σ (℃) from the brittle crack arrest steel specification in Table 3 of this UR, that is -10-2σ (℃), where 2σ is given in A5.3.4.2.

$T_{Kca6000}$ and $T_{Kca8000}$ in Fig. A5-1 are the temperatures at which the K_{ca} value of steel plates equals 6,000N/mm$^{3/2}$ and 8,000N/mm$^{3/2}$, respectively.

(ii) The temperature predicted from the small-scale test results through the regression equation shall be no higher than the value of -10-2σ(℃).

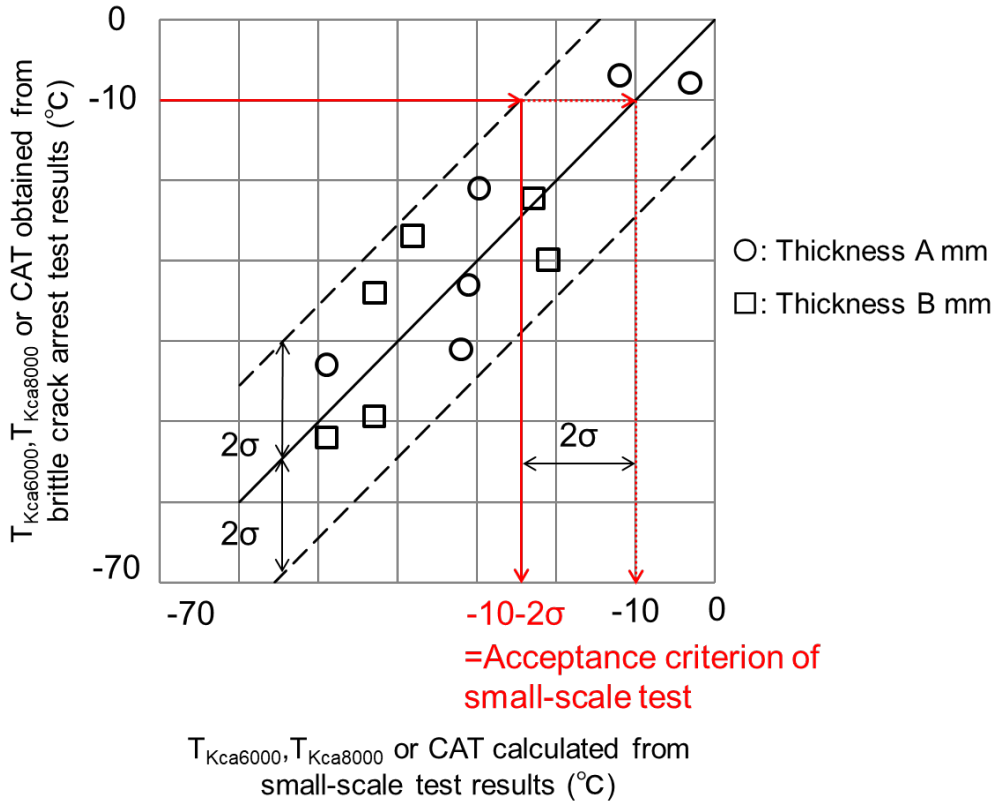

Fig. A5-1 Example for determination of acceptance criterion of small-scale test for correlation by means of temperature

(Note: This is only a schematic and may not represent the actual data obtained)

(b) For correlation by means of brittle crack arrest toughness (K_{ca}):

(i) The required K_{ca} (see Fig. A5-2) is obtained by adding 2σ (N/mm$^{3/2}$) to the brittle crack arrest steel specification in Table 3 of this UR, that is either 6,000+2σ(N/mm$^{3/2}$) in BCA1 or 8,000+2σ(N/mm$^{3/2}$) in BCA2, where 2σ is given in A5.3.4.2.

(ii) The K_{ca} value predicted from the small-scale test results through the regression equation shall be no smaller than the value of 6000+2σ(N/mm$^{3/2}$) for BCA1, or 8000+2σ(N/mm$^{3/2}$) for BCA2.

W31
(cont)

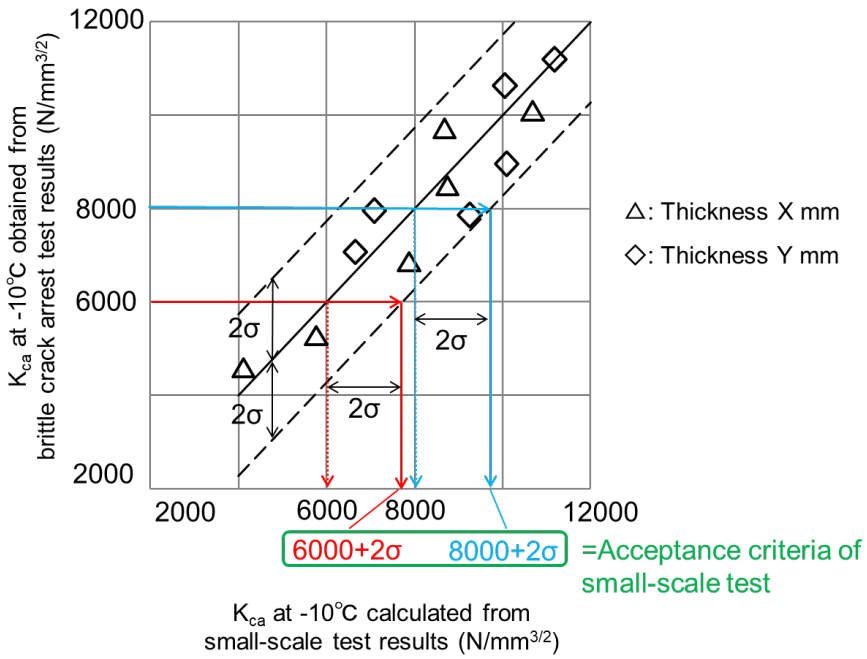

Fig. A5-2 Example for determination of acceptance criteria of small-scale test for correlation by means of brittle crack arrest toughness (K_{ca})
(Note: This is only a schematic and may not represent the actual data obtained)

A5.4. Approval Tests

A5.4.1 General

A5.4.1.1 In order to confirm the validity of the submitted technical documents specified in A5.2.1, approval tests are to be carried out.

A5.4.1.2 Approval test plan is to be approved by the Classification Society prior to testing.

A5.4.1.3 Considering the contents of the submitted technical documents specified in A5.2.1, the Classification Society may require additional tests in the following cases:

a) When the Classification Society determines that the number of brittle crack arrest tests or small-scale tests is too few to adequately confirm the validity of the acceptance criterion of small-scale tests (See A5.3.3.1);
b) When the Classification Society determines that the testing data obtained for setting the acceptance criterion of small-scale tests varies too widely (See A5.3.4.2), or that the data is clustered producing a biased correlation curve;
c) When the Classification Society determines that the validity of brittle crack arrest test results or small-scale test results for setting the acceptance criterion of small-scale tests is insufficient, or has some flaws during tests and/or for test results (See A5.3.3.2 and A5.3.3.3); and
d) Others as deemed necessary by the Classification Society.

A5.4.2 Extent of the approval tests

A5.4.2.1 Extent of the approval tests is to be in accordance with 2.1, Annex 1 and 3.1, Annex 2 of this UR.

W31
(cont)

A5.4.3 Type of tests

A5.4.3.1 Brittle crack arrest tests

A5.4.3.1.1 Brittle crack arrest tests are to be carried out in accordance with A2.3.3, Annex 2 of this UR.

A5.4.3.1.2 Where brittle crack arrest tests are carried out for evaluation of K_{ca}, K_{ca} at a specific temperature ($T_{Kca6000}$ or $T_{Kca8000}$) is to be obtained in accordance with A3.3 of Annex 3.

A5.4.3.1.3 Where brittle crack arrest tests are carried out for evaluation of CAT, deterministic CAT is to be obtained in accordance with A4.8.3 of Annex 4.

A5.4.3.2 Small-scale tests

A5.4.3.2.1 Small-scale tests are to be carried out in accordance with A5.3.3.3.

A5.5. Results

A5.5.1 Results of test items and the procedures shall comply with the test program approved by the Classification Society.

A5.5.2 For the brittle crack arrest test results, the manufacturer is to submit to the Classification Society the brittle crack arrest test reports in accordance with Annex 3 of this UR for K_{ca} and Annex 4 of this UR for CAT.

A5.5.3 For small-scale test results, the manufacturer is to submit to the Classification Society the small-scale test reports in accordance with the example of format of test reports submitted as specified in A5.2.1 b) of this Annex.

A5.6. Approval

Upon satisfactory completion of the survey and tests, and satisfactory confirmation of the submitted technical documents, the approval for small scale test procedure specification is granted by the Classification Society.

W31 (cont)

Table A5-1 Example of small-scale test method using NRL drop weight test and V-notch Charpy impact test (Informative)

Test type:	NRL drop weight test and V-notch Charpy impact test
Standard:	ASTM E208:2020 and ISO 148-1:2016
Sampling positions of test specimens:	NRL drop weight test: at surface V-notch charpy impact test: 1/4 of thickness
Length direction of test specimen:	Parallel to the final rolling direction of test plate
Regression equation:	$T_{Kca} = \alpha \cdot (NDTT + 10) + \beta \cdot vTrs + 153(t-5)^{1/13} - 170.5$ T_{Kca}: Temperature at K_{ca} of 6,000N/mm$^{3/2}$ or K_{ca} of 8,000N/mm$^{3/2}$, (℃) $NDTT$: Nil-ductility transition temperature (℃) ${}_vT_{rs}$: Transition temperature of the absorbed energy (℃) t: thickness α, β(1): constant
Notes:	(1) α and β are determined by comparing small-scale test results with brittle crack arrest test results.

Table A5-2 Example of small-scale test method using pressed-notch Charpy impact test (Informative)

Test type:	Pressed-notch Charpy impact test
Standard:	Dimension, shape, introducing method of notch: Manufacturer's proposal Others: ISO148-1:2016
Sampling position of test specimen:	1/2 of thickness
Length direction of test specimen:	Parallel to the final rolling direction of test plate
Regression equation:	$T_{Kca} = \alpha\, {}_pT_{E\gamma J} + \beta$ T_{Kca}: Temperature at K_{ca} of 6,000N/mm$^{3/2}$ or K_{ca} of 8,000N/mm$^{3/2}$, (℃) ${}_pT_{E\gamma J}$: Test temperature at absorbed energy of γ (J), (℃) α and β: Constant γ: Absorbed energy at brittle fracture surface ratio of δ (%),(J)
Notes:	(1) α, β, γ and δ are determined by comparing small-scale test results with brittle crack arrest test results.

W31
(cont)

Table A5-3 Example of small-scale test method using Side-section drop weight test (Informative)

Test type:	Side-section drop weight test
Standard:	Dimension: P-2 type of ASTM E 208 2020
Sampling positions of test specimens:	1/2 of thickness and side-section 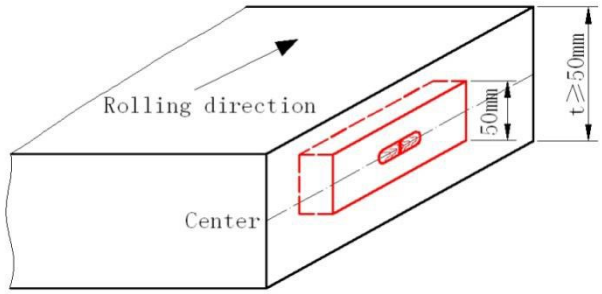
Length direction of test specimen:	Parallel to the final rolling direction of test plate
Regression equation:	$T_{Kca} = \alpha + \beta \cdot T_{NDT}^{side} + \gamma \cdot t^{1.5}$ T_{Kca}: Temperature at K_{ca} of 6,000N/mm$^{3/2}$ or K_{ca} of 8,000N/mm$^{3/2}$, (℃) T_{NDT}^{side}: Nil-ductility transition temperature obtained by side-section drop weight test, (℃) t : thickness α, β, γ(1): constant
Notes:	(1) α, β and γ are to be determined by comparing small-scale test results with brittle crack arrest test results.

End of Document

W32 Qualification scheme for welders of hull structural steels

(Sep 2016)
(Rev.1
Sep 2020)

1. Scope

1.1 This document gives requirements for a qualification scheme for welders intended to be engaged in the fusion welding of steels as specified in UR W7, W8, W11 and W31 for hull structures.

1.2 This qualification scheme does not cover welders engaged in oxy-acetylene welding.

1.3 This qualification scheme does not cover welding of pipes and pressure vessels.

1.4 Alternative welding Standards or Codes are to be applied in full, however, cross-mixing requirements of Standards and Codes is not permitted.

Note:

1. This UR is to be applied by IACS Societies to applications for welder or welding operator qualification (initial or renewal) dated on or after 1 January 2018.

2. This document does not invalidate welder’s qualifications issued and accepted by the Classification Society before 1 January 2018 provided the welder’s qualifications are considered by the Classification Society to meet the technical intent of this UR. These qualifications are to be renewed in accordance with this UR latest by 31 December 2020.

3. Certificates that expire after 1 January 2018 are to be renewed in accordance with this UR.

4. The welder's or welding operator's qualifications which have not been required by the Society's Rules before 1 January 2018, are to be initially issued in accordance with this UR by the 31 December 2020 at the latest.

5. Revision 1 of this UR is to be applied by IACS Societies to applications for welder or welding operator initial qualification dated on or after 1 January 2022.

5.1 Existing qualifications are to be renewed in accordance with Rev.1 of this UR when they become due.

W32
(cont)

2. General

2.1 Those welders intended to be engaged in welding of hull structures in shipyards and manufacturers shall be tested and qualified in accordance with this scheme and issued with a qualification certificate endorsed by the Society.

2.2 The welding operator responsible for setting up and/or adjustment of fully mechanized and automatic equipment, such as submerged arc welding, gravity welding, electro-gas welding and MAG welding with auto-carriage, etc., must be qualified whether he operates the equipment or not. However a welding operator, who solely operates the equipment without responsibility for setting up and/or adjustment, does not need qualification provided that he has experience of the specific welding work concerned and the production welds made by the operators are of the required quality.

The qualification test and approval range of the welding operator are left to the discretion of the Society with reference to ISO 14732:2013.

2.3 This document is applicable to welding of hull structures both during new construction and the repair of ships.

2.4 The training of welders, control of their qualification and maintenance of their skills are the responsibility of shipyards and manufacturers. The Society Surveyor is to verify and be satisfied that the welders are appropriately qualified.

2.5 Equivalence of national or international standards to this UR

2.5.1 Welders or welding operators qualified in accordance with national or international welder qualification standards may also be engaged in welding of hull structures at the discretion of the Society provided that standard is considered equivalent to this UR from technical perspective covering examination, testing and range approval.

2.5.2. Even if the requirements stipulated in the standards are applied, the requirement for revalidation of welders' qualification shall be in accordance with 6.2.1.

3. Range of qualification of welders

3.1 A welder is to be qualified in relation to the following variables of welding:

a) base metal

b) welding consumables type

c) welding process

d) type of welded joint

e) plate thickness

f) welding position

3.2 Base metals for qualification of welders or welding operators are combined into one group with a specified minimum yield strength $R_{eH} \leq 460$ N/mm^2. The welding of any one metal in this group covers qualification of the welder or welding operator for the welding of all other metals within this group.

W32 (cont)

3.3 For manual metal arc welding, qualification tests are required using basic, acid or rutile covered electrodes. The type of covered electrodes (basic, acid or rutile) included in the range of approval is left at the discretion of the Society.

Welding with filler material qualifies for welding without filler material, but not vice versa.

3.4 The welding processes for welder's qualification are to be classified in Table 1 as,

M - Manual welding

S - Semi-automatic welding/Partly mechanized welding

T - TIG welding

Each testing normally qualifies only for one welding process. A change of welding process requires a new qualification test.

Table 1 - Welding processes for welder's qualification

Symbol	Welding process in actual welding works		ISO 4063:2009
M	Manual welding	Manual metal arc welding (metal arc welding with covered electrode)	111
S	Partly mechanized welding	Metal inert gas (MIG) welding	131
		Metal active gas (MAG) welding Flux cored arc (FCA) welding	135, 138[1] 136[2]
T	TIG welding	Tungsten inert gas (TIG) welding	141

Note:

The Society may require separate qualification for solid wires, metal-cored wires and flux-cored wires as follows:

[1] A change from MAG welding with solid wires (135) to that with metal cored wires (138), or vice versa is permitted.

[2] A change from a solid or metal cored wire (135/138) to a flux cored wire (136) or vice versa requires a new welder qualification test.

3.5 The types of welded joint for welder's qualification are to be classified as shown in Table 2 in accordance with the qualification test.

Table 2 - Types of welded joint for welder's qualification

Type of welded joint used in the test assembly for the qualification test				Type of welded joint qualified
Butt weld	Single sided weld	With backing	A	A, C, F
		Without backing	B	A, B, C, D, F
	Double sided weld	With gouging	C	A, C, F
		Without gouging	D	A, C, D, F
Fillet weld	----	----	F	F

W32 (cont)

Welders engaged in full/partial penetration T welds shall be qualified for butt welds for the welding process and the position corresponding to the joints to be welded.

3.6 For fillet welding, welders who passed the qualification tests for multi-layer technique welding can be deemed as qualified for single layer technique, but not vice versa.

3.7 The qualified plate thickness range arising from the welder qualification test plate thickness is shown in Table 3.

Table 3 - Plate thicknesses for welder's qualification

Thickness of test assembly T (mm)	Qualified plate thickness range t (mm)
T < 3	T ≤ t ≤ 2T
3 ≤ T < 12	3 ≤ t ≤ 2T
12 ≤ T	3 ≤ t

3.8 The welding positions qualified as a result of the actual welding position used in a satisfactory welder's qualification test, are shown in Table 4 and Table 5. Diagrams showing the definitions of weld position used in Table 4 and Table 5 are shown in Figure 1.

Table 4 - Qualified welding positions when testing with butt welding

Qualification Test Position with butt weld	Qualified welding positions in actual welding works	
	Butt welds	Fillet welds
PA	PA	PA, PB
PC	PA, PC	PA, PB, PC
PE	PA, PC, PE	PA, PB, PC, PD, PE
PF	PA, PF	PA, PB, PF
PG	PG	PG

Table 5 - Qualified welding positions when testing with fillet welding

Qualification Test Position with fillet weld	Qualified welding positions in actual welding works
	Fillet welds
PA	PA
PB	PA, PB
PC	PA, PB, PC
PD	PA, PB, PC, PD, PE
PE	PA, PB, PC, PD, PE
PF	PA, PB, PF
PG	PG

The Society may require a qualification test with fillet welding for welders who are employed to perform fillet welding only. Welders engaged in welding of T joints with partial or full penetration are to be qualified for butt welding.

3.9 A welder qualified for butt or fillet welding can be engaged in tack welding for the welding process and position corresponding to those permitted in his certificate.

Alternatively, welders engaged in tack welding only can be qualified on the test assemblies shown in Figure 5 or Figure 6.

W32
(cont)

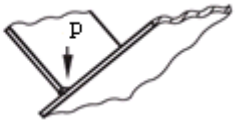

a) PA: flat position

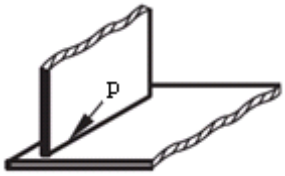

b) PB: horizontal vertical position

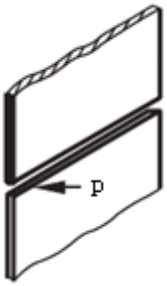

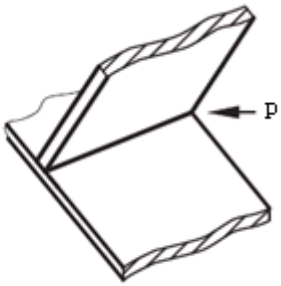

c) PC: horizontal position

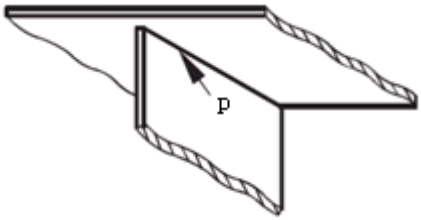

d) PD: horizontal overhead position

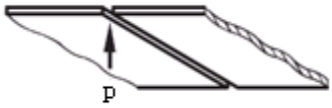

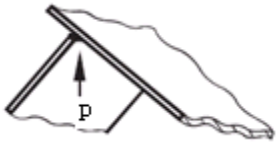

e) PE: overhead position

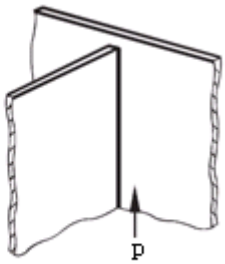

f) PF: vertical up position

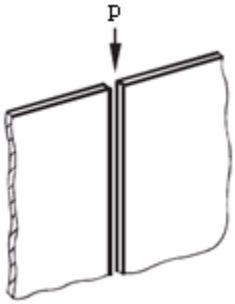

g) PG: vertical down position

Note: p is the welding position.

Figure 1 Welding positions

W32 (cont)

4. Qualification test

4.1 General

4.1.1 Welding of the test assemblies and testing of test specimens shall be witnessed by the Surveyor.

4.2 Test assemblies

4.2.1 Test assemblies for butt welds and for fillet welds are to be prepared as shown in Figure 2, Figure 3 and Figure 4 in each qualification test.

4.2.2 Test assemblies for butt tack welds and for fillet tack welds are to be prepared as shown in Figure 5 and Figure 6.

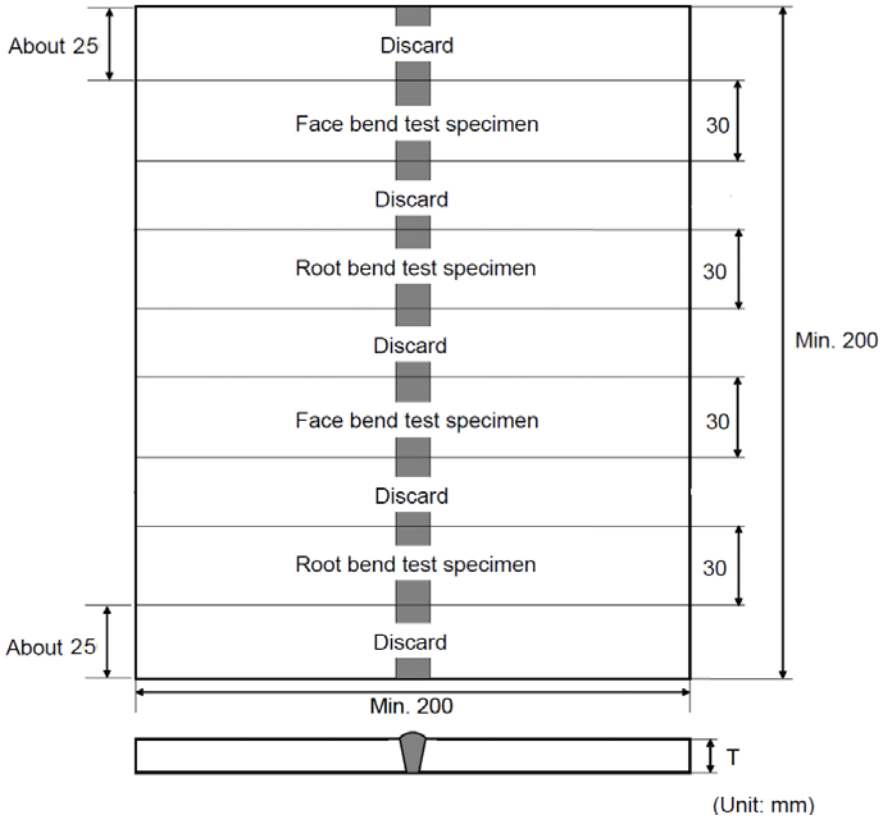

Figure 2 Dimensions and types of test assembly for butt welds (T ＜ 12mm)

W32
(cont)

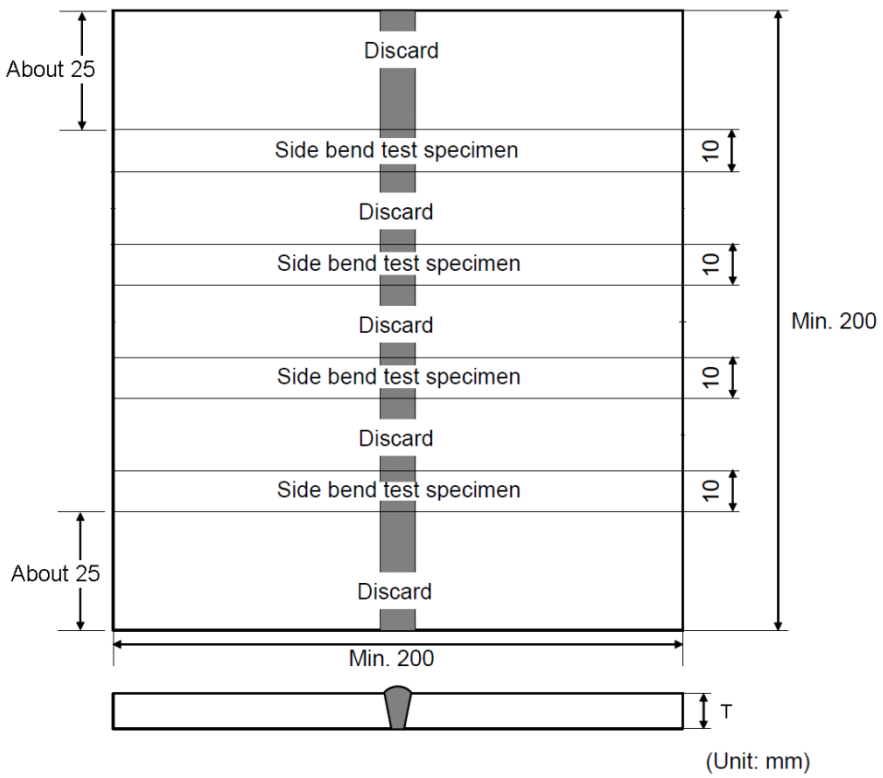

Figure 3 Dimensions and types of test assembly for butt welds (T ≥ 12mm)

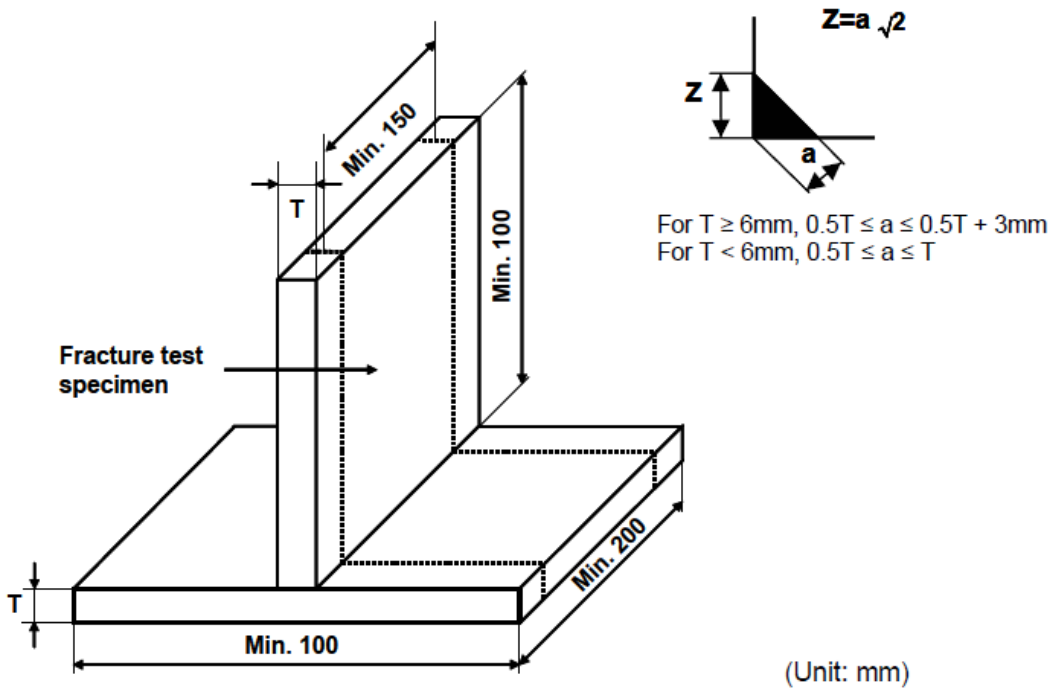

Figure 4 Dimensions and types of test assembly for fillet welds

W32
(cont)

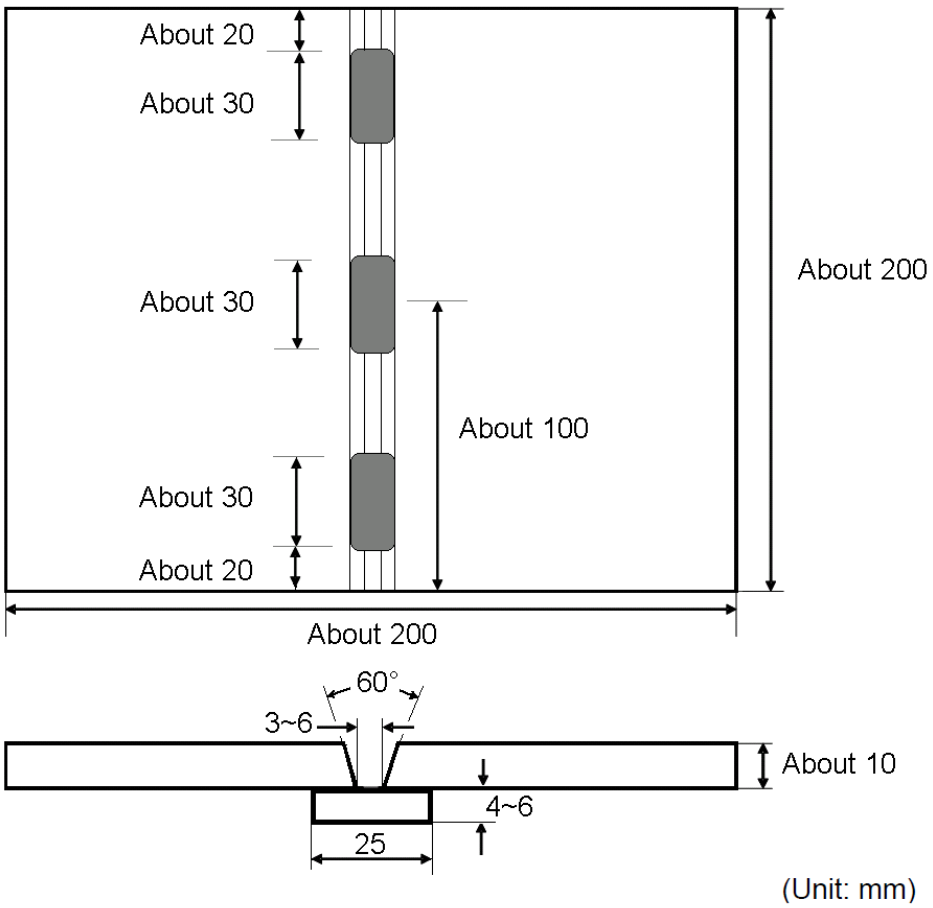

Figure 5 Dimensions and types of test assembly for tack butt welds

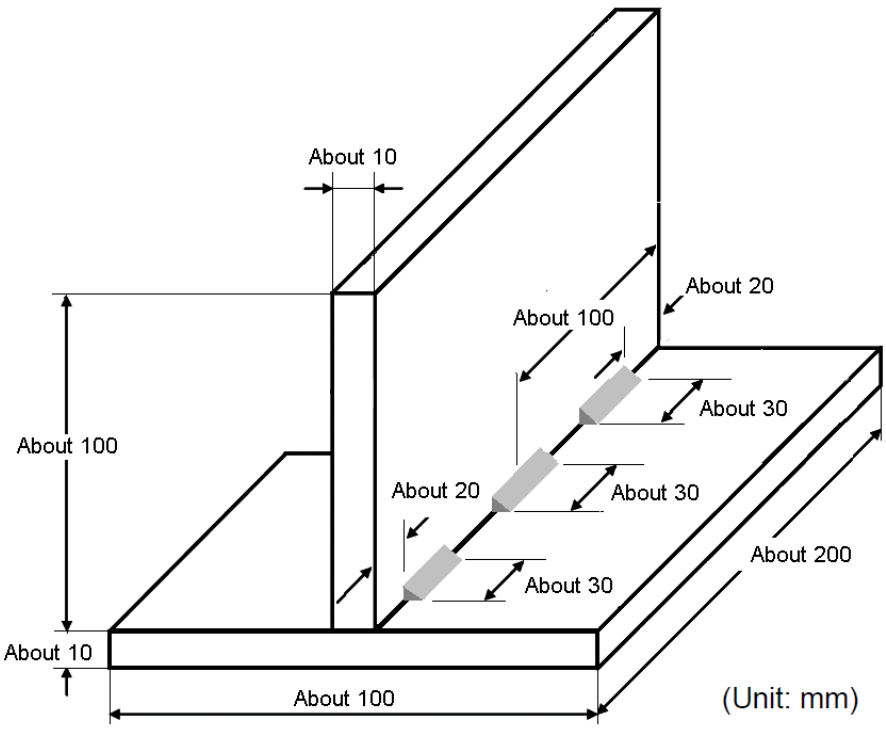

Figure 6 Dimensions and types of test assembly for tack fillet welds

W32 (cont)

4.2.3 Testing materials and welding consumables shall conform to one of the following requirements or to be of equivalent grade approved by the Society.

a) Testing materials

- Hull structural steels specified in UR W11
- Hull structural forged steels specified in UR W7
- Hull structural cast steels specified in UR W8
- Hull structural steels with specified minimum yield point 460 N/mm^2 specified in UR W31

b) Welding consumables

- Consumables for hull structural steels specified in UR W17
- Consumables for YP47 steels specified in UR W31

4.2.4 The welder qualification test assembly is to be welded according to a welding procedure specification (WPS or pWPS) simulating the conditions in production, as far as practicable.

4.2.5 Root run and capping run need each to have a minimum of one stop and restart. The welders are allowed to remove minor imperfections only in the stop by grinding before restart welding.

4.3 Examination and test

4.3.1 The test assemblies specified in 4.2 shall be examined and tested as follows:

a) For butt welds

- Visual examination
- Bend test

Note: Radiographic test or fracture test may be carried out in lieu of bend test except the gas-shielded welding processes with solid wire or metal cored wire.

b) For fillet welds

- Visual examination
- Fracture test

Note: Two macro sections may be taken in lieu of the fracture test.

c) For tack welds

- Visual examination
- Fracture test

Additional tests may be required, at the discretion of the Society.

W32 (cont)

4.3.2 Visual examination

The welds shall be visually examined prior to the cutting of the test specimen for the bend test and fracture test. The result of the examination is to show the absence of cracks or other serious imperfections.

Imperfections detected are to be assessed in accordance with quality level B in ISO 5817:2014, except for the following imperfection types for which level C applies;

- Excess weld metal
- Excess penetration
- Excessive convexity
- Excessive throat thickness

4.3.3 Bend test

Transverse bend test specimens are to be in accordance with UR W2.

The mandrel diameter to thickness ratio (i.e. D/T) is to be that specified for welding consumable (UR W17 and W31) approvals +1.

Two face bend test and two root bend test specimens are to be tested for initial qualification test, and one face and one root bend test specimens for extension of approval. For thickness 12mm and over, four side specimens (two side specimens for extension of approval) with 10 mm in thickness may be tested as an alternative.

At least one bend test specimen shall include one stop and restart in the bending part, for root run or for cap run.

The test specimens are to be bent through 180 degrees. After the test, the test specimens shall not reveal any open defects in any direction greater than 3mm. Defects appearing at the corners of a test specimen during testing should be investigated case by case.

4.3.4 Radiographic test

When radiographic testing is used for butt welds, imperfections detected shall be assessed in accordance with ISO 5817:2014, level B.

4.3.5 Fracture test (Butt welds)

When fracture test is used for butt welds, full test specimen in length is to be tested in accordance with ISO 9017:2017. Imperfections detected shall be assessed in accordance with ISO 5817:2014, level B.

4.3.6 Fracture test (Fillet welds)

The fracture test is to be performed by folding the upright plate onto the through plate. Evaluation shall concentrate on cracks, porosity and pores, inclusions, lack of fusion and incomplete penetration. Imperfections that are detected shall be assessed in accordance with ISO 5817:2014, level B.

W32 (cont)

4.3.7 Macro examination

When macro examination is used for fillet welds, two test specimens are to be prepared from different cutting positions; at least one macro examination specimen shall be cut at the position of one stop and restart in either root run or cap run. These specimens are to be etched on one side to clearly reveal the weld metal, fusion line, root penetration and the heat affected zone.

Macro sections shall include at least 10mm of unaffected base metal.

The examination is to reveal a regular weld profile, through fusion between adjacent layers of weld and base metal, sufficient root penetration and the absence of defects such as cracks, lack of fusion etc.

4.4 Retest

4.4.1 When a welder fails a qualification test, the following shall apply.

a) In cases where the welder fails to meet the requirements in part of the tests, a retest may be welded immediately, consisting of another test assembly of each type of welded joint and position that the welder failed. In this case, the test is to be done for duplicate test specimens of each failed test.

All retest specimens shall meet all of the specified requirements.

b) In cases where the welder fails to meet the requirements in all parts of the required tests or in the retest prescribed in 4.4.1 a), the welder shall undertake further training and practice.

c) When there is specific reason to question the welder's ability or the period of effectiveness has lapsed, the welder shall be re-qualified in accordance with the tests specified in 4.2 and 4.3.

4.4.2 Where any test specimen does not comply with dimensional specifications due to poor machining, a replacement test assembly shall be welded and tested.

5. Certification

5.1 Qualification certificates are normally issued when the welder has passed the qualification test in accordance with the Society's Rules. Each Shipyard and Manufacturer shall be responsible for the control of the validity of the certificate and the range of the approval.

5.2 The following items shall be specified in the certificate:

a) Range of qualification for base metal, welding processes, filler metal type, types of welded joint, plate thicknesses and welding positions.

b) Expiry date of the validity of the qualification.

c) Name, date of birth, identification and the photograph of the welder.

d) Name of shipbuilder / manufacturer.

W32 (cont)

5.3 When a certificate is issued, the relative documents such as test reports and/or re-validation records shall be archived as annexes to the copy of certificate according to the rules of the Society.

5.4 The status of approvals of each individual qualification is to be demonstrated to the Classification Society when requested.

6. Period of Validity

6.1 Initial approval

6.1.1 Normally the validity of the welder's approval begins from the issue date of qualification certificate when all the required tests are satisfactorily completed.

6.1.2 The certificate is to be signed at six-month intervals by the shipyards/manufacturers personnel who is responsible for production weld quality provided that all the following conditions are fulfilled:

a) The welder shall be engaged with reasonable continuity on welding work within the current range of approval. An interruption for a period no longer than six months is permitted.

b) The welder's work shall in general be in accordance with the technical conditions under which the approval test is carried out.

c) There shall be no specific reason to question the welder's skill and knowledge.

6.1.3 If any of these conditions are not fulfilled, the Society is to be informed and the certificate is to be cancelled.

6.1.4 The validity of the certificate may be maintained in agreement with the Society as specified in 6.2. The chosen maintenance option of qualification in accordance with 6.2.1 a) or b) or c) shall be stated on the certificate at the time of issue.

6.2 Maintenance of the approval

6.2.1 Revalidation shall be carried out by the Society. The skill of the welder shall be periodically verified by one of the following options:

a) The welder shall be re-tested every 3 years.

b) Every 2 years, two welds made during the last 6 months of the 2 years validity period shall be tested by radiographic or ultrasonic testing or destructive testing and shall be recorded. The weld tested shall reproduce the initial test conditions except for the thickness. These tests revalidate the welder's qualifications for an additional 2 years.

c) A welder's qualification for any certificate shall be valid as long as it is signed according to 6.1.2 subject that all the following conditions are fulfilled. In this option, the fulfilment of all the conditions is to be verified by the Society. The frequency of verification by the Society is to be no longer than 3 years and is to be agreed between the Society and the shipyards/manufacturers.

I. The welder is working for the same shipyard/manufacturer which is responsible for production weld quality as indicated on his or her qualification certificate.

W32
(cont)

II. Society shall verify that the welder quality management system of the shipyard/manufacturer includes as minimum:

- A designated person responsible for the coordination of the welder quality management system.
- List of welders and welding supervisors in shipyard/manufacturer
- If applicable, list of subcontracted welders
- Qualification certificate of welders and description of the associated management system
- Training requirements for welder qualification programme
- Identification system for welders and WPS used on welds
- Procedure describing the system in place to monitor each welder performance based on results of welds examination records (e.g. repair rate, etc.) including the criteria permitting the maintenance of the welder qualification without retesting.

III. The shipyards/manufacturers have to document at least once a year that the welder has produced acceptable welds in accordance with construction quality standards and Classification Society's requirements in the welding positions, type of welds and backing conditions covered by its certificate. Which documents are required and how to document the evidences should be in agreement between the Society and the shipyards/manufacturers.

6.2.2 The Society has to verify compliance with the above conditions and sign the maintenance of the welder's qualification certificate.

W32
(cont)

Annex: Example of Welder's qualification certificate

WELDER'S QUALIFICATION CERTIFICATE

Welder's name:		Date of birth:	Photograph
Cert. No:		Sex:	
Identification No.			
Employer's name and address			
WPS/pWPS No.			
Date of initial approval			
This is to certify that the welder has passed the qualification test [/and re-validation record audit] according to the rules of [the Society], and is qualified to undertake welding operation specified in range of qualification of this certificate.			
Items	Test piece	Range of qualification	
Welding process			
Base metal			
Filler metal type			
Plate thickness			
Type of welded joint			
Welding position			
Revalidation method	In accordance with 6.2.1 a) ☐ b) ☐ c) ☐		
Other details			

This certificate is issued at _____[place], and valid until _____[DD/MM/YYYY].

Signature/seal of examiner: _____ Issued on _____[DD/MM/YYYY].

	Report No. to be reviewed	Date of report	Signature of Employee	Date of signature
1				
2				
3				
4				
5				
6				

W32
(cont)

TEST RECORD

Type of test	Performed and accepted	Not required
Visual examination		
Radiographic examination		
Surface examination		
Macro examination		
Fracture test		
Bend test		
Additional tests		

* At the discretion of the Society, this page can be as the back page of a certificate, and also can be as a separate file.

End of Document

W33 Non-destructive testing of ship hull steel welds

(Dec 2019)
(Rev.1
May 2020)
(Corr.1
Aug 2021)

1 General

1.1 This document gives minimum requirements on the methods and quality levels that are to be adopted for the non-destructive testing (NDT) of ship hull structure steel welds during new building ("hull structure" as defined in UR Z23).

1.2 The quality levels given in this document refer to production quality and not to fitness-for-purpose of the welds examined.

1.3 The NDT is normally to be performed by the Shipbuilder or its subcontractors in accordance with these requirements. The Classification Surveyor may require witnessing of the testing.

1.4 It is the Shipbuilder's responsibility to assure that testing specifications and procedures are adhered to during the construction and the reports are made available to the Classification Society on the findings made by the NDT.

1.5 The extent of testing and the number of checkpoints are to be agreed between the Shipbuilder and the Classification Society. For criticality of structure reference is to be made to IACS UR S6 Tables of Structural Member Categories and IACS CSR for Bulk Carriers and Oil Tankers

1.6 This UR covers conventional NDT methods. Advanced non-destructive testing (ANDT) methods such as phased array ultrasonic testing (PAUT), time of flight diffraction (TOFD), digital radiography (RT-D), radioscopic testing (RT-S), and computed radiography (RT-CR) are covered by UR W34.

Note:

1. This UR is to be uniformly implemented by IACS Societies to ships contracted for construction on or after 1 July 2021.

2. The "contracted for construction" date means the date on which the contract to build the vessel is signed between the prospective owner and the Shipbuilder. For further details regarding the date of "contract for construction", refer to IACS Procedural Requirement (PR) No. 29.

3. Rev.1 of this Unified Requirement is to be uniformly implemented by IACS Societies to ships contracted for construction on or after 1 July 2021.

W33 (cont)

1.7 Terms and definitions

The following terms and definitions apply for this document.

NDT Non-Destructive Testing - the development and application of technical methods to examine materials or components in ways that do not impair their future usefulness and serviceability, in order to measure geometrical characteristics and to detect, locate, measure and evaluate flaws. NDT is also known as non-destructive examination (NDE), non-destructive inspection (NDI) and non-destructive evaluation (NDE).

RT Radiographic Testing

UT Ultrasonic Testing

MT Magnetic Particle Testing

PT Dye or Liquid Penetrant Testing

PWHT Post Weld Heat Treatment

VT Visual Testing

2 Application

2.1 Base Metals

2.1.1 This document applies to fusion welds made in normal and higher strength hull structural steels in accordance with UR W11, and UR W31, high strength steels for welded structures in accordance with UR W16 and connections welds with hull steel forgings in accordance with UR W7 and hull steel castings in accordance with UR W8. Base metal other than the above may be applied by each Classification Society

2.2 Welding processes

2.2.1 This document applies to fusion welds made using manual metal arc welding (shielded metal arc welding, 111), gas-shielded metal arc welding (gas metal arc welding, including flux cored arc welding, 13x), gas-shielded arc welding with non-consumable tungsten electrode (gas tungsten arc welding, 14x), submerged arc welding (12x), electro-slag welding (72x) and electro-gas welding processes (73). Terms and numbers according to ISO 4063:2009 ("x" indicates that relevant subgroups are included). This document may also be applied to welding processes other than the above at the discretion of each Classification Society.

2.3 Weld joints

2.3.1 This document applies to butt welds with full penetration, tee, corner and cruciform joints with or without full penetration, and fillet welds.

2.4 Timing of NDT

2.4.1 NDT shall be conducted after welds have cooled to ambient temperature and after post weld heat treatment where applicable.

W33 (cont)

2.4.2 For high strength steels for welded structure with specified minimum yield stress in the range of 420 N/mm² to 690 N/mm², NDT shall not be carried out before 48 hours after completion of welding. For steel with specified minimum yield greater than 690 N/mm² NDT shall not be carried out before 72 hours after completion of welding. Regardless of yield strength consideration is to be given to requiring a delayed inspection where evidence of delayed cracking has been observed in production welds.

At the discretion of the surveyor, a longer interval and/or additional random inspection at a later period may be required, (for example in case of high thickness welds).

At the discretion of the surveyor, the 72 hour interval may be reduced to 48 hours for RT or UT inspection, provided there is no indication of delayed cracking, and a complete visual and random MT or PT inspection to the satisfaction of the surveyor is conducted 72 hours after welds have been completed and cooled to ambient temperature.

Where PWHT is carried out the requirement for testing after a delay period may be relaxed, at the discretion of the surveyor.

2.5 Applicable methods for testing of weld joints

2.5.1 The methods mentioned in this document for detection of surface imperfections are VT, PT and MT. The methods mentioned for detection of internal imperfections are UT and RT.

2.5.2 Applicable methods for testing of the different types of weld joints are given in Table 1.

Table 1: Applicable methods for testing of weld joints

WELD JOINT	PARENT MATERIAL THICKNESS	APPLICABLE TEST METHODS
Butt welds with full penetration	thickness < 8mm[1]	VT, PT, MT, RT
	thickness ≥ 8mm	VT, PT, MT, UT, RT
Tee joints, corner joints and cruciform joints with full penetration	thickness < 8mm[1]	VT, PT, MT, RT[3]
	thickness ≥ 8mm	VT, PT, MT, UT, RT[3]
Tee joints, corner joints and cruciform joints without full penetration and fillet welds	All	VT, PT, MT, UT[2], RT[3]

Notes:

1) In cases of thickness below 8mm the Classification Society may consider application of an appropriate advanced UT method.
2) UT may be used to check the extent of penetration in tee, corner and cruciform joints. This requirement is to be agreed with the Classification Society.
3) RT may be applied however there will be limitations

W33
(cont)

3 Qualification of personnel involved in NDT

3.1 The Shipbuilder or its subcontractors is responsible for the qualification and preferably 3rd party certification of its supervisors and operators to a recognised certification scheme based on ISO 9712:2012.

Personnel qualification to an employer based qualification scheme as e.g. SNT-TC-1A, 2016 or ANSI/ASNT CP-189, 2016 may be accepted if the Shipbuilder or its subcontractors written practice is reviewed and found acceptable by the Society. The Shipbuilder or its subcontractors written practice shall as a minimum, except for the impartiality requirements of a certification body and/or authorised body, comply with ISO 9712:2012.

The supervisors' and operators' certificates and competence shall comprise all industrial sectors and techniques being applied by the Shipbuilder or its subcontractors.
Level 3 personnel shall be certified by an accredited certification body.

3.2 The Shipbuilder or its subcontractors shall have a supervisor or supervisors, responsible for the appropriate execution of NDT operations and for the professional standard of the operators and their equipment, including the professional administration of the working procedures. The Shipbuilder or its subcontractors shall employ, on a full-time basis, at least one supervisor independently certified to Level 3 in the method(s) concerned as per the requirements of item 3.1. It is not permissible to appoint Level 3 personnel; they must be certified by an accredited certification body. It is recognised that a Shipbuilder or its subcontractors may not directly employ a Level 3 in all the stated methods practiced. In such cases, it is permissible to employ an external, independently certified, Level 3 in those methods not held by the full-time Level 3(s) of the Shipbuilder or its subcontractors.

The supervisor shall be directly involved in review and acceptance of NDT Procedures, NDT reports, calibration of NDT equipment and tools. The supervisor shall on behalf of the Shipbuilder or its subcontractors re-evaluate the qualification of the operators annually.

3.3 The operator carrying out the NDT and interpreting indications, shall as a minimum, be qualified and certified to Level 2 in the NDT method(s) concerned and as described in item 3.1.

However, operators only undertaking the gathering of data using any NDT method and not performing data interpretation or data analysis may be qualified and certified as appropriate, at level 1.

The operator shall have adequate knowledge of materials, welding, structures or components, NDT equipment and limitations that are sufficient to apply the relevant NDT method for each application appropriately.

4 Surface condition

4.1 Areas to be examined shall be free from scale, slag, loose rust, weld spatter, oil, grease, dirt or paint that might affect the sensitivity of the testing method.

Preparation and cleaning of welds for subsequent NDT are to be in accordance with the accepted NDT procedures, and are to be to the satisfaction of the surveyor. Surface conditions that prevent proper interpretation may be cause for rejection of the weld area of interest.

W33
(cont)

5 General plan of testing: NDT method selection

5.1 The extent of testing and the associated quality levels are to be planned by the Shipbuilder according to the ship design, ship type and welding processes used. For new construction survey reference is to be made to the NDT requirements of IACS UR Z23 and the applicable parts of the UR Z23 enclosures Table 1 and Appendices.

5.2 For each construction, the Shipbuilder shall submit a plan for approval by the Classification Society, specifying the areas to be examined and the extent of testing and the quality levels, with reference to the NDT procedures to be used. Particular attention is to be paid to inspecting welds in highly stressed areas and welds in primary and special structure indicated in IACS UR S6. The NDT procedure(s) shall meet the requirement stated in section 6 of this UR and the specific requirements of the Classification Society. The plan shall only be released to the personnel in charge of the NDT and its supervision.

In selecting checkpoints, emphasis shall be given to the following inspection locations:

Welds in high stressed areas
Fatigue sensitive areas
Other important structural elements
Welds which are inaccessible or very difficult to inspect in service
Field erected welds
Suspected problem areas

Block construction welds performed in the yards, or at subcontracted yards/facilities, are to be considered in selecting checkpoints.

For other marine and offshore structures the extent is to be agreed by the Classification Society.

If an unacceptable level of indications are found the NDT extent is to be increased.

5.3 The identification system shall identify the exact locations of the lengths of weld examined.

5.4 All welds over their full length are to be subject to VT by personnel designated by the Shipbuilder, who may be exempted from the qualification requirements defined in section 3 of the UR.

5.5 As far as practicable, PT or MT shall be used when investigating the outer surface of welds, checking the intermediate weld passes and back-gouged joints prior to subsequent passes deposition. MT shall be performed in ferromagnetic materials welds unless otherwise agreed with the Classification Society. Surface inspection of important tee or corner joints, using an approved MT or PT method, shall be conducted to the satisfaction of the surveyor.

5.6 Welded connections of large cast or forged components (e.g. stern frame, stern boss, rudder parts, shaft brackets...) are to be tested over their full length using MT (MT is the preferred method) or PT, (PT is to be applied for non-ferrous metals) and at agreed locations using RT or UT.

5.7 As given in Table 1, UT or RT or a combination of UT and RT may be used for testing of butt welds with full penetration of 8mm or greater. Methods to be used shall be agreed with the Classification Society. The method used shall be suited for the detection of particular types and orientations of discontinuities. RT and UT are used for detection of internal discontinuities, and in essence they supplement and complement each other. RT is generally

W33 (cont)

most effective in detecting volumetric discontinuities (e.g. porosity and slag) whilst UT is more effective for detecting planar discontinuities (e.g. laminations, lack of fusion and cracks). Although one method may not be directly relatable to the other, either one would indicate conditions of inadequate control of the welding process.

5.8 In general start/stop points in welds made using automatic or fully mechanized welding processes are to be examined using RT or UT, except for internal members where the extent of testing is to be agreed with the attending surveyor.

5.9 Where the surveyor becomes aware that an NDT location has been repaired without a record of the original defect, the shipyard is to carry out additional examinations on adjacent areas to the repaired area to the satisfaction of the attending surveyor. Reference is to be made to UR Z23.

5.10 Welds in thick steels (>50mm) used in container carrier, deck and hatch coaming areas are to be inspected in accordance with the additional requirements in IACS UR S33

6 Testing

6.1 General

6.1.1 The testing method, equipment and conditions shall comply with recognized National or International standards, or other documents to the satisfaction of the Classification Society.

6.1.2 Sufficient details shall be given in a written procedure for each NDT technique submitted to the Classification Society for acceptance.

6.1.3 The testing volume shall be the zone which include the weld and parent material for at least 10mm each side of the weld, or the width of the heat affected zone (HAZ), whichever is greater. In all cases inspection shall cover the whole testing volume.

6.1.4 Provision is to be made for the surveyor to verify the inspection, reports and records (e.g. radiographs) on request.

6.2 Visual testing (VT)

6.2.1 The personnel in charge of VT is to confirm that the surface condition is acceptable prior to carrying out the inspection. VT shall be carried out in accordance with standards agreed between the Shipbuilder and the Classification Society.

6.3 Liquid penetrant testing (PT)

6.3.1 PT shall be carried out in accordance to ISO 3452-1:2013 or a recognized accepted standard and the specific requirement of each Classification Society.

6.3.2 The extent of PT shall be in accordance to the plans agreed with the attending surveyor and to the satisfaction of the surveyor.

6.3.3 The surface to be examined shall be clean and free from scale, oil, grease, dirt or paint so there are not contaminants and entrapped material that may impede penetration of the inspection media.

W33
(cont)

6.3.4 The temperature of parts examined shall be typically between 5°C and 50°C, outside this temperature range special low/high temperature penetrant and reference comparator blocks shall be
used.

6.4 Magnetic particle testing (MT)

6.4.1 MT shall be carried out in accordance to ISO 17638:2016 or a recognized accepted standard and the specific requirement of each Classification Society.

6.4.2 The extent of MT shall be in accordance to the plans agreed with the attending surveyor and to the satisfaction of the surveyor.

6.4.3 The surface to be examined shall be free from scale, weld spatter, oil, grease, dirt or paint and shall be clean and dry. In general, the inside and outside of the welds to be inspected need to be sufficiently free from irregularities that may mask or interfere with interpretation.

6.5 Radiographic testing (RT)

6.5.1 RT shall be carried out in accordance to ISO 17636-1:2013 or an accepted recognized standard and any specific requirement of Classification Society

6.5.2 The minimum inspected weld length for each checkpoint is to be specified in the approved NDT plan (see 5.2) and shall follow the requirements of each Classification Society.

For hull welds the minimum length inspected by RT is typically 300mm. The extent of RT shall be in accordance to the approved plans and to the satisfaction of the surveyor.

Consideration may be given for reduction of inspection frequency for automated or fully mechanized welds where quality assurance techniques indicate consistent satisfactory quality. The number of checkpoints is to be increased if the proportion of non-conforming indications is abnormally high.

6.5.3 The inside and outside surfaces of the welds to be radiographed are to be sufficiently free from irregularities that may mask or interfere with interpretation. Surface conditions that prevent proper interpretation of radiographs may be cause for rejection of the weld area of interest.

6.6 Ultrasonic testing (UT)

6.6.1 UT shall be carried out according to procedure based on ISO 17640:2018 (testing procedure), ISO 23279:2017 (characterization) and ISO 11666:2018 (acceptance levels) or accepted standards and the specific requirements of the Classification Society.

6.6.2 The minimum inspected weld length for each checkpoint is to be specified in the approved NDT plan (see 5.2) and shall follow the requirements of each Classification Society.

The extent of UT shall be in accordance to the approved plans and to the satisfaction of the surveyor.

A checkpoint shall consist of the entire weld length or a length agreed with the Classification Society.

7 Acceptance Levels (criteria)

W33 (cont)

7.1 General

7.1.1 This section details the acceptance levels (criteria) followed for the assessment of the NDT results. Techniques include but are not limited to: VT, MT, PT, RT and UT.

7.1.2 As far as necessary, testing techniques shall be combined to facilitate the assessment of indications against the acceptance criteria.

7.1.3 The assessment of indications not covered by this document shall be made in accordance with a standard agreed with the Classification Society. Alternative acceptance criteria can be agreed with the Classification Society, provided equivalency is established.

The general accepted methods for testing of welds are provided in Table 2 and Table 3 for surface and embedded discontinuities respectively. Refer to ISO 17635:2016.

Table 2. Method for detection of surface discontinuities (All type of welds including fillet welds)

Materials	***Testing Methods***
Ferritic Steel	VT
	VT, MT
	VT, PT

Table 3. NDT for detection of embedded discontinuities (for butt and T joints with full penetration)

Materials and type of joint	***Nominal thickness (t) of the parent material to be welded (mm)***		
	t < 8	***8 ≤ t ≤ 40***	***t > 40***
Ferritic butt-joints	RT or UT[1]	RT or UT	UT or RT[2]
Ferritic T-joints	UT[1] or RT[2]	UT or RT[2]	UT or RT[2]

Notes:

1) Below 8mm the Classification Society may consider application of an appropriate advanced UT method.
2) RT may be applied however there will be limitations.

7.2 Quality Levels.

Testing requirements follows the designation of a particular quality level of imperfections in fusion-welded joints in accordance with ISO 5817:2014. Three quality levels (B, C and D) are specified.

In general Quality level C is to be applied for hull structure.

Quality level B corresponds to the highest requirement on the finished weld, and may be applied on critical welds.

W33 (cont)

This standard applies to steel materials with thickness above 0.5 mm. ISO 5817:2014 Table 1 provides the requirements on the limits of imperfections for each quality level. ISO 5817:2014 Annex A also provides examples for the determination of percentage of imperfections (number of pores in surface percent).

All levels (B,C and D) refer to production quality and not to the fitness for purpose (ability of product, process or service to serve a defined purpose under specific conditions). The correlation between the quality levels defined in ISO 5817:2014, testing levels/ techniques and acceptance levels (for each NDT technique) will serve to define the purpose under specific conditions. The acceptance level required for examination shall be agreed with the Classification Society. This will determine the quality level required in accordance with the non-destructive technique selected. Refer to tables 4 to 9.

7.3 Testing Levels.

7.3.1 The testing coverage and thus the probability of detection increases from testing level A to testing level C. The testing level shall be agreed with the Classification Society. Testing level D is intended for special applications, this can only be used when defined by specification. ISO 17640:2018 Annex A tables A.1 to A.7 provide guidance on the selection of testing levels for all type of joints in relation to the thickness of parent material and inspection requirements.

7.3.2 The testing technique used for the assessment of indications shall also be specified.

7.4 Acceptance Levels.

7.4.1 The acceptance levels are specified for each testing technique used for performing the inspection. The criteria applied is to comply with each standard identified in tables 4 to 9 (or any recognized acceptable standard agreed with the Classification Society).

7.4.2 Probability of detection (POD) indicates the probability that a testing technique will detect a given flaw.

7.5 Visual testing (VT)

7.5.1 The acceptance levels and required quality levels for VT are provided in IACS Rec 47 and Table 4 below.

Table 4. Visual testing

Quality Levels (ISO 5817:2014 applies)[a]	***Testing Techniques/ levels (ISO 17637:2016 applies)[a]***	***Acceptance levels[b]***
B	Level not specified	B
C		C
D		D

[a] Or any recognized standard agreed with Classification Society and demonstrated to be acceptable
[b] The acceptance levels for VT are the same to the quality levels requirements of ISO 5817:2014

W33 (cont)

7.6 Penetrant testing (PT)

7.6.1 The acceptance levels and required quality levels for PT are provided in Table 5 below:

Table 5. Penetrant Testing

Quality Levels (ISO 5817:2014 applies)[a]	*Testing Techniques/ levels (ISO 3452-1:2013 applies)[a]*	*Acceptance levels (ISO 23277:2015 applies)[a]*
B	Level not specified	2X
C		2X
D		3X
[a] Or any recognized standard agreed with Classification Society and demonstrated to be acceptable		

7.7 Magnetic Particle testing (MT)

7.7.1 The acceptance levels and required quality levels for MT is provided in Table 6 below:

Table 6. Magnetic Particle Testing

Quality Levels (ISO 5817:2014 applies)[a]	*Testing Techniques/ levels (ISO 17638:2016 applies)[a]*	*Acceptance levels (ISO 23278:2015 applies)[a]*
B	Level not specified	2X
C		2X
D		3X
[a] Or any recognized standard agreed with Classification Society and demonstrated to be acceptable		

7.8 Radiographic testing (RT)

7.8.1 The acceptance levels and required quality levels for RT are provided in Table 7 below. Reference radiographs for the assessment of weld imperfections shall be provided in accordance to ISO 5817:2014 or acceptable recognized standard agreed with the Classification Society.

Table 7. Radiographic Testing

Quality Levels (ISO 5817:2014 applies)[a]	*Testing Techniques/ levels (ISO 17636-1:2013 applies)[a]*	*Acceptance levels (ISO 10675-1:2016 applies)[a]*
B	B (class)	1
C	B[b] (class)	2
D	At least A (class)	3
[a] Or any recognized standard agreed with Classification Society and demonstrated to be acceptable [b] For circumferential weld testing, the minimum number of exposures may correspond to the requirements of ISO 17636-1:2013, class A		

W33 (cont)

7.9 Ultrasonic testing (UT)

7.9.1 The acceptance levels and required quality levels for UT are provided in Tables 8 and 9 below:

Table 8. Ultrasonic Testing

Quality Levels (ISO 5817:2014 applies) [a, b]	*Testing Techniques/Levels (ISO 17640:2018 applies)* [a, b]	*Acceptance Levels (ISO 11666:2018 applies)* [a, b]
B	at least B	2
C	at least A	3
D	at least A	3[c]

[a] Or any recognized standard agreed with Classification Society and demonstrated to be acceptable
[b] When characterization of indications is required, ISO 23279:2017 is to be applied
[c] UT is not recommended but can be defined in a specification with same requirement as Quality Level C

Table 9. Recommended Testing and Quality Levels (ISO 17640)

Testing Level[a,b,c] *(ISO 17640:2018 applies)*	*Quality Level (ISO 5817:2014 applies)*
A	C, D
B	B
C	By agreement
D	Special application

[a] POD increases from testing level A to C as testing coverage increases
[b] Testing Level D for special application shall be agreed with Classification Society
[c] Specific requirements for testing levels A to C, are provided for various types of joints in ISO 17460:2018 Annex A

7.9.2 UT Acceptance Levels apply to the examination of full penetration ferritic steel welds, with thickness from 8 mm to 100mm. The nominal frequency of probes used shall be between 2MHz and 5MHz. Examination procedures for other type of welds, material, thicknesses above 100 mm and examination conditions shall be submitted to the consideration of the Classification Society.

7.9.3 The acceptance levels for UT of welds are to be defined in accordance to ISO 11666:2018 requirements or any recognized acceptable standard agreed with the Classification Society. The standard specifies acceptance level 2 and 3 for full penetration welded joints in ferritic steels, corresponding to quality levels B and C (Refer to table 8).

7.9.4 Sensitivity settings and levels. The sensitivity levels are set by the following techniques:

- Technique 1: based on 3mm diameter side- drilled holes
- Technique 2: based on distance gain size (DGS) curves for flat bottom holes (disk-shaped reflectors)
- Technique 3: using a distance-amplitude-corrected (DAC) curve of a rectangular notch of 1mm depth and 1mm width
- Technique 4: using the tandem technique with reference to a 6mm diameter flat-bottom hole (disk shaped reflector)

W33 (cont)

The evaluation levels (reference, evaluative, recording and acceptance) are specified in ISO 11666:2018 Annex A.

8 Reporting

8.1 Reports of NDT required shall be prepared by the Shipbuilder and shall be made available to the Classification Society.

8.2 Reports of NDT shall include the following generic items:

- Date of testing
- Hull number, location and length of weld inspected
- Names, qualification level and signature of personnel that have performed the testing
- Identification of the component examined
- Identification of the welds examined
- Steel grade, type of joint, thickness of parent material, welding process
- Acceptance criteria
- Testing standards used
- Testing equipment and arrangement used
- Any test limitations, viewing conditions and temperature
- Results of testing with reference to acceptance criteria, location and size of reportable indications
- Statement of acceptance / non-acceptance, evaluation date, name and signature of evaluator
- Number of repairs if specific area repaired more than twice

8.3 In addition to generic items, reports of PT shall include the following specific items:

- Type of penetrant, cleaner and developer used
- Penetration time and development time

8.4 In addition to generic items, reports of MT shall include the following specific items:

- Type of magnetization
- Magnetic field strength
- Detection media

W33 (cont)

- Viewing conditions
- Demagnetization, if required

8.5 In addition to generic items, reports of RT shall include the following specific items:

- Type and size of radiation source (width of radiation source), X-ray voltage
- Type of film/designation and number of film in each film holder/cassette
- Number of radiographs (exposures)
- Type of intensifying screens
- Exposure technique, time of exposure and source-to-film distance as per below:
- Distance from radiation source to weld
- Distance from source side of the weld to radiographic film
- Angle of radiation beam through the weld (from normal)
- Sensitivity, type and position of IQI (source side or film side)
- Density
- Geometric un-sharpness
- Specific acceptance class criteria for RT

Examinations used for acceptance or rejection of welds shall be recorded in an acceptable medium. A written record providing following information: identification and description of welds, procedures and equipment used, location within recorded medium and results shall be included. The control of documentation unprocessed original images and digitally processes images is to be to the satisfaction of the surveyor.

8.6 In addition to generic items, reports of UT shall include the following specific items:

- Type and identification of ultrasonic equipment used (instrument maker, model, series number), probes (instrument maker, serial number), transducer type (angle, serial number and frequency) and type of couplant (brand).
- Sensitivity levels calibrated and applied for each probe
- Transfer loss correction applied Type of reference blocks
- Signal response used for defect detection
- Reflections interpreted as failing to meet acceptance criteria

The method for review and evaluation of UT reports is required for adequate quality control and is to be to the satisfaction of the surveyor.

8.7 The shipyard is to keep the inspection records specified in 8.2 to 8.6 of this document for at least for 5 years.

W33 (cont)

9 Unacceptable indications and repairs

9.1 Unacceptable indications shall be eliminated and repaired where necessary. The repair welds are to be examined on their full length using appropriate NDT method at the discretion of the Surveyor.

9.2 When unacceptable indications are found, additional areas of the same weld length shall be examined unless it is agreed with the surveyor and fabricator that the indication is isolated without any doubt. In case of automatic or fully mechanized welded joints, additional NDT shall be extended to all areas of the same weld length.

All radiographs exhibiting non-conforming indications are to be brought to the attention of the surveyor. Such welds are to be repaired and inspected as required by the surveyor. When non-conforming indications are observed at the end of a radiograph, additional RT is generally required to determine their extent. As an alternative, the extent of non-conforming welds may be ascertained by excavation, when approved by the surveyor.

9.3 The extent of testing can be extended at the surveyor's discretion when repeated non-acceptable discontinuities are found.

9.4 The inspection records specified in section 8 are to include the records of repaired welds.

9.5 The Shipbuilder shall take appropriate actions to monitor and improve the quality of welds to the required level. The repair rate is to be recorded by the shipyard and any necessary corrective actions are to be identified in the builder's QA system.

End of Document

W34 (Dec 2019) Advanced non-destructive testing of materials and welds

1. General

1.1 This document gives minimum requirements on the methods and quality levels that are to be adopted for the advanced non-destructive testing (ANDT) of materials and welds during new building of ships. The advanced methods intended for use under this UR are listed in Section 2.

1.2 The ANDT is to be performed by the shipbuilder, manufacturer or its subcontractors in accordance with these requirements. The Classification Society's surveyor may require witnessing testing.

1.3 It is the shipbuilder's or manufacturer's responsibility to ensure that testing specifications and procedures are adhered to during the construction, and the report is to be made available to the Classification Society on the findings made by the ANDT.

1.4 The extent and method of testing, and the number of checkpoints are normally agreed between the shipyard and the Classification Society.

1.5 Terms and definitions

The following terms and definitions apply for this document.

ANDT	Advanced non-destructive testing
RT-D	Digital Radiography
RT-S	Radioscopic testing with digital image acquisition(dynamic≥12bit)
RT-CR	Testing with computed radiography using storage phosphor imaging plates
PAUT	Phased Array Ultrasonic Testing
TOFD	Time of Flight Diffraction
AUT	Automated Ultrasonic Examinations. A technique of ultrasonic examination performed with equipment and search units that are mechanically mounted and guided, remotely operated, and motor-controlled (driven) without adjustments by the technician. The equipment used to perform the examinations is capable of recording the ultrasonic response data, including the scanning positions, by means of integral encoding devices such that imaging of the acquired data can be performed.

Note:

1. This UR is to be uniformly implemented by IACS Societies to ships contracted for construction on or after 1 July 2021.

2. The "contracted for construction" date means the date on which the contract to build the vessel is signed between the prospective owner and the shipbuilder. For further details regarding the date of "contract for construction", refer to IACS Procedural Requirement (PR) No. 29.

W34
(cont)

SAUT Semi-Automated Ultrasonic Examinations. A technique of ultrasonic examination performed with equipment and search units that are mechanically mounted and guided, manually assisted (driven), and which may be manually adjusted by the technician. The equipment used to perform the examinations is capable of recording the ultrasonic response data, including the scanning positions, by means of integral encoding devices such that imaging of the acquired data can be performed

2. Applicability

2.1 Materials

2.1.1 This document applies to the following materials and manufactured products:

- Material and welding for gas tankers in accordance with UR W1
- Normal and higher strength hull structural steels in accordance with UR W11
- High strength steels for welded structures in accordance with UR W16
- Hull steel forgings in accordance with UR W7
- Hull and machinery steel castings in accordance with UR W8
- Extremely Thick Steel Plates in Container Ships in accordance with UR S33
- Cast Copper Alloy propellers in accordance with UR W24
- Aluminium alloys for hull construction in accordance with UR W25
- Cast Steel Propellers in accordance with UR W27
- YP47 Steels and Brittle Crack Arrest Steels in accordance with UR W31
- Hull and machinery steel forgings in accordance with REC68
- Marine steel castings in accordance with REC69

2.2 Welding processes

2.2.1 This document applies to welding processes specified in Table 1. ANDT of welding process unspecified in Table 1 is to be to the satisfaction of the Classification Society.

Table 1 Applicable welding process

Welding process		ISO 4063:2009
Manual welding	Shield Metal Arc Welding(SMAW)	111
Resistance welding	Flash welding(FW)	24
Semi-automatic welding	(1) Metal Inert Gas welding(MIG) (2) Metal Active Gas welding(MAG) (3) Flux Cored Arc Welding(FCAW)	131 135, 138 136
TIG welding	Gas Tungsten Arc Welding(GTAW)	141
Automatic welding	(1) Submerged Arc Welding(SAW) (2) Electro-gas Welding(EGW) (3) Electro-slag Welding(ESW)	12 73 72

W34
(cont)

2.3 Weld joints

2.3.1 This document applies to butt welds with full penetration. Variations of joint design, for example, tee, corner and cruciform joints (with or without full penetration) can be tested using PAUT. The constraints of joint design with respect to testing are to be recognized, documented, and agreed with the Society before application.

2.4 Timing of ANDT

2.4.1 ANDT are to be conducted after welds have cooled to ambient temperature and after post weld heat treatment where applicable.

2.4.2 Timing of ANDT on ship hull welds on steels with specified minimum yield stress in the range of 420 N/mm^2 to 690 N/mm^2 shall be in accordance with 2.4.2 of UR W33 Non-destructive testing of ship hull steel welds.

2.5 Testing methods

2.5.1 The methods mentioned in this document for detection of imperfections are PAUT (only automated / semi-automated PAUT), TOFD, RT-D.

2.5.2 Applicable methods for testing of the different types of materials and weld joints are given in Table 2.

W34
(cont)

Table 2 Applicable methods for testing of materials and weld joints

MATERIALS AND WELD JOINTS	PARENT MATERIAL THICKNESS	APPLICABLE METHODS
Ferritic butt welds with full penetration	thickness<6mm	RT-D
	6 mm ≤ thickness ≤ 40 mm	PAUT, TOFD, RT-D
	thickness>40mm	PAUT, TOFD, RT-D*
Ferritic tee joints and corner joints with full penetration	thickness≥6mm	PAUT, RT-D*
Ferritic cruciform joints with full penetration	thickness≥6mm	PAUT*
Austenitic stainless steel butt welds with full penetration[1]	thickness<6mm	RT-D
	6 mm ≤ thickness ≤ 40 mm	RT-D, PAUT*
	thickness>40mm	PAUT*, RT-D*
Austenitic stainless steel tee joints, corner joints with full penetration[1]	thickness≥6mm	PAUT*, RT-D*
Aluminum tee joints and corner joints with full penetration	thickness≥6mm	PAUT*, RT-D*
Aluminum cruciform joints with full penetration	thickness≥6mm	PAUT*
Aluminum butt welds with full penetration	thickness<6mm	RT-D
	6 mm ≤ thickness ≤ 40 mm	RT-D, TOFD, PAUT
	thickness>40mm	TOFD, PAUT, RT-D*
Cast Copper Alloy	All	PAUT, RT-D*
Steel forgings	All	PAUT, RT-D*
Steel castings	All	PAUT, RT-D*
Base materials/Rolled steels, Wrought Aluminum Alloys	thickness<6mm	RT-D
	6 mm ≤ thickness ≤ 40 mm	PAUT, TOFD, RT-D
	thickness>40mm	PAUT, TOFD, RT-D*
*Only applicable with limitations, need special qualification subject to acceptance by Classification Society.		

Note: 1) The ultrasonic testing of anisotropic material using advanced methods will require specific procedures and techniques. Additionally, the use of complementary techniques and equipment may also be required, e.g. using angle compression waves, and/or creep wave probes for detecting defects close to the surface.

3. Qualification of personnel involved in ANDT

3.1 The Shipbuilder, manufacturer or its subcontractors is responsible for the qualification and preferably 3rd party certification of its supervisors and operators to a recognised certification scheme based on ISO 9712:2012.

Personnel qualification to an employer based qualification scheme as e.g. SNT-TC-1A, 2016 or ANSI/ASNT CP-189, 2016 may be accepted if the Shipbuilder, manufacturer or its subcontractors written practice is reviewed and found acceptable by the Society. The Shipbuilder, manufacturer or its subcontractors written practice shall as a minimum, except for the impartiality requirements of a certification body and/or authorised body, comply with ISO 9712:2012.

W34 (cont)

The supervisors' and operators' certificates and competence shall comprise all industrial sectors and techniques being applied by the Shipbuilder or its subcontractors.
Level 3 personnel shall be certified by an accredited certification body.

3.2 The Shipbuilder, manufacturer or its subcontractors shall have a supervisor or supervisors, responsible for the appropriate execution of NDT operations and for the professional standard of the operators and their equipment, including the professional administration of the working procedures. The Shipbuilder, manufacturer or its subcontractors shall employ, on a full-time basis, at least one supervisor independently certified to Level 3 in the method(s) concerned as per the requirements of item 3.1. It is not permissible to appoint Level 3 personnel; they must be certified by an accredited certification body. It is recognised that a Shipbuilder, manufacturer or its subcontractors may not directly employ a Level 3 in all the stated methods practiced. In such cases, it is permissible to employ an external, independently certified, Level 3 in those methods not held by the full-time Level 3(s) of the Shipbuilder, manufacturer or its subcontractors.

The supervisor shall be directly involved in review and acceptance of NDT Procedures, NDT reports, calibration of NDT equipment and tools. The supervisor shall on behalf of the Shipbuilder, manufacturer or its subcontractors re-evaluate the qualification of the operators annually.

3.3 The operator carrying out the NDT and interpreting indications, shall as a minimum, be qualified and certified to Level 2 in the NDT method(s) concerned and as described in item 3.1.

However, operators only undertaking the gathering of data using any NDT method and not performing data interpretation or data analysis may be qualified and certified as appropriate, at level 1.

The operator shall have adequate knowledge of materials, weld, structures or components, NDT equipment and limitations that are sufficient to apply the relevant NDT method for each application appropriately.

4. Technique and procedure qualification

4.1 General

The shipbuilder or manufacturer has to submit to the Classification Society the following documentation for review:

- The technical documentation of the ANDT.
- The operating methodology and procedure of the ANDT according to section 7.
- Result of software simulation, when applicable.

4.2 Software simulation

Software simulation may be required by the Classification Society, when applicable for PAUT or TOFD techniques. The simulation may include initial test set-up, scan plan, volume coverage, result image of artificial flaw etc.. In some circumstances, artificial defect modeling/simulation may be needed or required by the project.

W34
(cont)

4.3 Procedure qualification test

The procedure qualification for ANDT system shall include the following steps:

- Review of available performance data for the inspection system (detection abilities and defect sizing accuracy).

- Identification and evaluation of significant parameters and their variability.

- Planning and execution of a repeatability and reliability test programme[1] which including onsite demonstration.

- Documentation of results from the repeatability and reliability test programs.

Note: 1) The data from the repeatability and reliability test program is to be analyzed with respect to comparative qualification block test report and onsite demonstration. The qualification block shall be in accordance with ASME V Article 14 MANDATORY APPENDIX II UT PERFORMANCE DEMONSTRATION CRITERIA or agreed by the Classification Society, and at least the intermediate level qualification blocks shall be used. The high level qualification blocks shall be used when sizing error distributions and an accurate POD need to be evaluated. The demonstration process onsite shall be witnessed by the Classification Society's surveyor.

4.4 Procedure approval

The testing procedure is to be evaluated based upon the qualification results, if satisfactory the procedure can be considered approved.

4.5 Onsite review

For the test welds, supplementary NDT shall be performed on an agreed proportion of welds to be cross checked with other methods. Alternatively, other documented reference techniques may be applied to compare with ANDT results.

Data analyses shall be performed in accordance with the above activities. Probability of Detection (PoD) and sizing accuracy shall be established when applicable.

When the result of inspection review does not conform to the approved procedure, the inspection shall be suspended immediately. Additional procedure review qualification and demonstration shall be undertaken to account for any nonconformity.

When a significant nonconformity is found, the Classification Society has the right to reject the results of such activities.

5. Surface condition

5.1 Area to be examined shall be free from scale, loose rust, weld spatter, oil, grease, dirt or paint that might affect the sensitivity of the testing method.

5.2 Where there is a requirement to carry out PAUT or TOFD through paint, the suitability and sensitivity of the test shall be confirmed through an appropriate transfer correction method defined in the procedure. In all cases, if transfer losses exceed 12 dB, the reason shall be considered and further preparation of the scanning surfaces shall be carried out, if applicable. If testing is done through paint, then the procedure shall be qualified on a painted surface.

W34 (cont)

5.3 The requirement for acceptable test surface finish is to ensure accurate and reliable detection of defects. For the testing of welds, where the test surface is irregular or has other features likely to interfere with the interpretation of NDT results, the weld is to be ground or machined.

6. General plan of testing: NDT method selection

6.1 The extent of testing shall be planned by the shipbuilder or manufacturer according to the ship design, ship or equipment type and welding processes used. Particular attention shall be paid to highly stressed areas. The extent of testing shall be in accordance with UR or REC applicable with material of weld examined.

7. Testing requirements

7.1 General

7.1.1 The shipyard or manufacturer is to ensure that personnel carrying out NDT or interpreting the results of NDT are qualified to the appropriate level as detailed in section 3.

7.1.2 Procedures
(1) All NDT are to be carried out to a procedure that is representative of the item under inspection.

(2) Procedures are to identify the component to be examined, the NDT method, equipment to be used and the full extent of the examinations including any test restrictions.

(3) Procedures are to include the requirement for components to be positively identified and for a datum system or marking system to be applied to ensure repeatability of inspections.

(4) Procedures are to include the method and requirements for equipment calibrations and functional checks, together with specific technique sheets / scan plans, for the component under test.

(5) Procedures are to be approved by personnel qualified to Level III in the appropriate technique in accordance with a recognised standard.

(6) Procedures are to be reviewed by the Classification Society's Surveyor.

7.1.3 The methods considered within the application of this UR are defined in section 2.5.1

7.1.4 PAUT techniques shall conform as a minimum to section 7.2 of this UR. Depending on the complexity of the item under test and the access to surfaces, there may be a requirement for additional scans and/or complementary NDT techniques to ensure that full coverage of the item is achieved.

7.1.4.1 PAUT of welds shall include a linear scan of the fusion face, together with other scans as defined in the specific test technique. Refer to linear scan requirements in section 7.2.2.4

7.1.5 TOFD techniques shall conform as a minimum to section 7.3 of this UR. Depending on the complexity of the item under test and the access to surfaces, there may be a requirement for additional scans and/or complementary NDT techniques to ensure that full coverage of the item is achieved.

W34
(cont)

7.1.6 RT-D techniques shall conform as a minimum to section 7.4 of this UR. For the purpose of this UR, RT-D comprises of two main RT methods; RT-S and RT-CR. Other methods may be included (e.g. radioscopy systems), however, then must conform to this UR as applicable, and any specific requirements shall demonstrate equivalence to these requirements.

7.1.6.1 In all RT-D methods, in addition to specific requirements, detector output quality control methods shall be described within the procedure.

7.1.6.2 The procedure shall define the level of magnification, post-processing tools, image/data security and storage, for final evaluation and reporting.

7.2 Phased array ultrasonic testing

PAUT shall be carried out according to procedures based on ISO 13588:2019, ISO 18563-1:2015, ISO 18563-2:2017, ISO 18563-3:2015 and ISO 19285:2017 or recognized standards and the specific requirements of the Classification Society.

7.2.1 Information required prior to testing

A procedure shall be written and include the following information as in minimum shown in table 3. When an essential variable in Table 3 is to change from the specified value, or range of values, the written procedure shall require requalification. When a nonessential variable is to change from the specified value, or range of values, requalification of the written procedure is not required. All changes of essential or nonessential variables from the value, or range of values, specified by the written procedure shall require revision of, or an addendum to, the written procedure.

W34
(cont)

Table 3 Requirements of a PAUT Procedure

Requirement	Essential Variable	Nonessential Variable
Material types or weld configurations to be examined, including thickness dimensions and material product form (castings, forgings, pipe, plate, etc.)	X	…
The surfaces from which the examination shall be performed	X	…
Technique(s) (straight beam, angle beam, contact, and/or immersion)	X	…
Angle(s) and mode(s) of wave propagation in the material	X	…
Search unit type, frequency, element size and number, pitch and gap dimensions, and shape	X	…
Focal range (identify plane, depth, or sound path)	X	…
Virtual aperture size (i.e., number of elements, effective height[1], and element width)	X	…
Focal laws for E-scan and S-scan (i.e., range of element numbers used, angular range used, element or angle increment change)	X	…
Special search units, wedges, shoes, or saddles, when used	X	…
Ultrasonic instrument(s)	X	…
Calibration [calibration block(s) and technique(s)]	X	…
Directions and extent of scanning	X	…
Scanning (manual vs. automatic)	X	…
Method for sizing indications and discriminating geometric from flaw indications	X	…
Computer enhanced data acquisition, when used	X	…
Scan overlap (decrease only)	X	…
Personnel performance requirements, when required	X	…
testing levels, acceptance levels and/or recording levels	X	…
Personnel qualification requirements	…	X
Surface condition (examination surface, calibration block)	…	X
Couplant (brand name or type)	…	X
Post-examination cleaning technique	…	X
Automatic alarm and/or recording equipment, when applicable	…	X
Records, including minimum calibration data to be recorded (e.g., instrument settings)	…	X
Environmental and safety issues	…	X

Note: 1) Effective height is the distance from the outside edge of the first to last element used in the focal law.

7.2.2 Testing

7.2.2.1 Testing levels

The testing levels specified in the testing procedure shall be in accordance with recognized standards accepted by the Classification Society. Four testing levels are specified in ISO 13588:2019, each corresponding to a different probability of detection of imperfections.

W34
(cont)

7.2.2.2 Weld Examinations

The weld examinations shall in accordance with ISO 13588:2019 and the additional special requirements of this UR.

7.2.2.3 Material Examinations

Material examinations shall conform to section 2.1 as a minimum.

7.2.2.4 Volume to be inspected

The purpose of the testing shall be defined by the testing procedure. Based on this, the volume to be inspected shall be determined.

A scan plan shall be provided. The scan plan shall show the beam coverage, the weld thickness and the weld geometry.

If the evaluation of the indications is based on amplitude only, it is a requirement that an 'E' scan (or linear scan) shall be utilized to scan the fusion faces of welds, so that the sound beam is perpendicular to the fusion face ± 5º. This requirement may be omitted if an 'S' (or sectorial) scan can be demonstrated to verify that discontinuities at the fusion face can be detected and sized, using the stated procedure (note, this demonstration shall utilize reference blocks containing suitable reflectors in location of fusion zone).

7.2.2.5 Reference blocks

Depending on the testing level, a reference block shall be used to determine the adequacy of the testing (e.g. coverage, sensitivity setting). The design and manufacture of reference blocks shall be in accordance with ISO 13588:2019 or recognized equivalent standards and the specific requirements of the Classification Society.

7.2.2.6 Indication assessment

Indications detected when applying testing procedure shall be evaluated either by length and height or by length and maximum amplitude. Indication assessment shall be in accordance with ISO 19285:2017 or recognized standards and the specific requirements of the Classification Society. The sizing techniques include reference levels, Time Corrected Gain (TCG), Distance Gain Size (DGS) and 6 dB drop. 6 dB drop method shall only be used for measuring the indications larger than the beam width.

7.3 Time of flight diffraction

TOFD shall be carried out according to procedure based on ISO 10863:2011, and ISO 15626:2018 or recognized standards and the specific requirements of the Classification Society.

7.3.1 Information required prior to testing

A procedure shall be written and include the following information as shown in table 4. When an essential variable in Table 4 is to change from the specified value, or range of values, the written procedure shall require requalification. When a nonessential variable is to change from the specified value, or range of values, requalification of the written procedure is not required. All changes of essential or nonessential variables from the value, or range of values, specified by the written procedure shall require revision of, or an addendum to, the written procedure.

W34
(cont)

Table 4 Requirements of a TOFD Procedure

Requirement	Essential Variable	Nonessential Variable
Weld configurations to be examined, including thickness dimensions and material product form (castings, forgings, pipe, plate, etc.)	X	…
The surfaces from which the examination shall be performed	X	…
Angle(s) of wave propagation in the material	X	…
Search unit type(s), frequency(ies), and element size(s)/shape(s)	X	…
Special search units, wedges, shoes, or saddles, when used	X	…
Ultrasonic instrument(s) and software(s)	X	…
Calibration [calibration block(s) and technique(s)]	X	…
Directions and extent of scanning	X	…
Scanning (manual vs. automatic)	X	…
Data sampling spacing (increase only)	X	…
Method for sizing indications and discriminating geometric from flaw indications	X	…
Computer enhanced data acquisition, when used	X	…
Scan overlap (decrease only)	X	…
Personnel performance requirements, when required	X	…
testing levels, acceptance levels and/or recording levels	X	…
Personnel qualification requirements	…	X
Surface condition (examination surface, calibration block)	…	X
Couplant (brand name or type)	…	X
Post-examination cleaning technique	…	X
Automatic alarm and/or recording equipment, when applicable	…	X
Records, including minimum calibration data to be recorded (e.g., instrument settings)	…	X
environmental and safety issues	…	X

7.3.2 Testing

7.3.2.1 Testing levels

The testing levels specified in the testing procedure shall be in accordance with recognized standards accepted by the Classification Society. Four testing levels are specified in ISO 10863:2011, each corresponding to a different probability of detection of imperfections.

7.3.2.2 Volume to be inspected

The purpose of the testing shall be defined by the testing procedure. Based on this, the volume to be inspected shall be determined.

A scan plan shall be provided. The scan plan shall show the locations of the probes, beam coverage, the weld thickness and the weld geometry.

7.3.2.3 Due to the nature of the TOFD method, there is a possibility that the scan plan may reveal weld volume zones that will not receive full TOFD coverage (commonly known as dead zones, either in the lateral wave, back wall, or both). If the scan plan reveals that these

W34 (cont)

dead zones are not adequately inspected, then further TOFD scans and/or complementary NDT methods shall be applied to ensure full inspection coverage.

7.4 Digital radiography

Digital radiography shall be performed per procedure(s) based on ISO 17636-2:2013 and standards referenced therein, or recognized standards and additional specific requirements of the Classification Society.
Any variation to applying the standard (e.g. IQI placement) shall be agreed with Classification Society.

A procedure shall be written and include the following information as shown in table 5.

Table 5 Requirements of a Digital radiography Procedure

Requirement
Material types or weld configurations to be examined, including thickness dimensions and material product form (castings, forgings, pipe, plate, etc.)
Digitizing System Description:
Manufacturer and model no. of digitizing system
Physical size of the usable area of the image monitor
Film size capacity of the scanning device
Spot size(s) of the film scanning system
Image display pixel size as defined by the vertical/horizontal resolution limit of the monitor
Illuminance of the video display
Data storage medium
Digitizing Technique:
Digitizer spot size (in microns) to be used
Loss-less data compression technique, if used
Method of image capture verification
Image processing operations
Time period for system verification
Spatial resolution used:
Contrast sensitivity (density range obtained)
Dynamic range used
Spatial linearity of the system
Material type and thickness range
Source type or maximum X-ray voltage used
Detector type
Detector calibration
Minimum source-to-object distance
Distance between the test object and the detector
Source size
Test object scan plan (if applicable)
Image Quality Measurement Tools
Image Quality Indicator (IQI)
Wire Image Quality Indicator
Duplex Image Quality Indicator
Image Identification Indicator
Testing levels, acceptance levels and/or recording levels
Personnel qualification requirements
Surface condition
Records, including minimum calibration data to be recorded
Environmental and Safety issues

W34 (cont)

7.4.1 Testing levels

Regarding choice of testing level per ISO 17636-2:2013 this is referred to in section 8.4.

8. Acceptance Levels

8.1 General

8.1.1 This section details the acceptance levels followed for the assessment of the NDT results. Methods include but are not limited to: Phased array ultrasonic testing (PAUT), Time of flight diffraction (TOFD), Digital radiography (RT-D).

8.1.2 It may be necessary to combine testing methods to facilitate the assessment of indications against the acceptance criteria.

8.1.3 Acceptance criteria for each material and weld joint shall be in accordance with each UR and Recommendation in section 2.1.1.

8.2 Phased array ultrasonic testing

8.2.1 Weld Examinations

The relationship between acceptance levels, testing levels and quality levels is given in Table 6.
Quality levels and acceptance levels for PAUT of welds shall be in accordance with ISO 19285:2017 or recognized standard agreed with the Classification Society.

Table 6 Acceptance levels for PAUT

Quality levels according to ISO 5817:2014	Testing level according to ISO 13588:2019	Acceptance levels according to ISO 19285:2017
C, D	A	3
B	B	2
By agreement	C	1
Special application	D	By agreement

8.2.2 Material Examinations

Quality levels and acceptance levels for PAUT of material testing shall be in accordance to recognized standard agreed with the Classification Society.
The acceptance levels for material examinations shall conform as a minimum to the appropriate IACS Resolutions, including UR and Recommendations.

8.3 Time of flight diffraction

The relationship between acceptance levels, testing levels and quality levels is given in Table 7.

Quality levels and acceptance levels for TOFD of welds shall be in accordance to ISO 15626:2018 or recognized standard agreed with the Classification Society.

W34
(cont)

Table 7 Acceptance levels for TOFD

Quality levels according to ISO 5817:2014	Testing level according to ISO 10863:2011	Acceptance level according to ISO 15626:2018
B (Stringent)	C	1
C (Intermediate)	At least B	2
D (Moderate)	At least A	3

8.4 Digital radiography

The relationship between acceptance levels, testing levels and quality levels is given in Table8.
Quality levels and acceptance levels for Digital Radiography of welds shall be in accordance with ISO 10675 or standard agreed with the Classification Society.

Table 8 Acceptance levels for Digital radiography

Quality levels according to ISO 5817:2014 or ISO 10042:2018	Testing techniques/level(class) according to ISO 17636-2:2013	Acceptance level according to ISO 10675-1:2016 & ISO 10675-2:2017
B (Stringent)	B (class)	1
C (Intermediate)	B* (class)	2
D (Moderate)	A (class)	3
*For circumferential weld testing, the minimum number of exposures may correspond to the requirements of ISO 17636-2:2013, class A		

9. Reporting

9.1 The test report shall include at least the following information:

a) a reference to standards of compliance;

b) information relating to the object under test:
1) identification of the object under test,
2) dimensions including wall thickness,
3) material type and product form,
4) geometrical configuration,
5) location of welded joint(s) examined,
6) reference to welding process and heat treatment,
7) surface condition and temperature,
8) stage of manufacture;

c) information relating to equipment:

W34 (cont)

Table 9 Information relating to equipment

Method	Information
All	manufacturer and type of instrument, including with identification numbers if required.
PAUT	1) manufacturer, type, frequency of phased array probes including number and size of elements, material and angle(s) of wedges with identification numbers if required, 2) details of reference block(s) with identification numbers if required, 3) type of couplant used.
TOFD	1) manufacturer, type, frequency, element size and beam angle(s) of probes with identification numbers if required, 2) details of reference block(s) with identification numbers if required, 3) type of couplant used.
RT-D	1) system of marking used, 2) radiation source, type and size of focal spot and identification of equipment used, 3) detector, screens and filters and detector basic spatial resolution.

d) information relating to test technology:

Table 10 Information relating to test technology

Method	Information
All	1) testing level and reference to a written test procedure, 2) purpose and extent of test, 3) details of datum and coordinate systems, 4) method and values used for range and sensitivity settings, 5) details of signal processing and scan increment setting, 6) access limitations and deviations from standards, if any.
PAUT	1) increment (E-scans) or angular increment (S-scans), 2) element pitch and gap dimensions, 3) focus (calibration should be the same as scanning), 4) virtual aperture size, i.e. number of elements and element width, 5) element numbers used for focal laws, 6) documentation on permitted wedge angular range from manufacturer, 7) documented calibration, TCG and angle gain compensation, 8) scan plan.
TOFD	1) details of TOFD setups, 2) details of offset scans, if required.
RT-D	1) detector position plan, 2) tube voltage used and current or source type and activity, 3) time of exposure and source-to-detector distance, 4) type and position of image quality indicators, 5) achieved and required SNR_N for RT-S or achieved and required grey values and/or SNR_N for RT-CR, 6) for RT-S: type and parameters such as gain, frame time, frame number, pixel size, calibration procedure, 7) for RT-CR: scanner type and parameters such as pixel size, scan speed, gain, laser intensity, laser spot size, 8) image-processing parameters used, e.g. of the digital filters.

W34 (cont)

e) information relating to test results:

Table 11 Information relating to test results

Method	Information
All	1) acceptance criteria applied, 2) tabulated data recording the classification, location and size of relevant indications and results of evaluation, 3) results of examination including data on software used, 4) date of test, 5) reference to the raw data file(s), 6) date(s) of scan or exposure and test report, 7) names, signatures and certification of personnel.
PAUT	1) phased array images of at least those locations where relevant indications have been detected on hard copy, all images or data available in soft format, 2) reference points and details of the coordinate system.
TOFD	TOFD images of at least those locations where relevant TOFD indications have been detected.

9.2 Results of NDT are to be recorded and evaluated by the shipbuilder or manufacturer on a continual basis. These records are to be available to the Surveyor.

9.3 The shipbuilder or manufacturer is to be responsible for the review, interpretation, evaluation and acceptance of the results of NDT. Reports stating compliance or otherwise with the criteria established in the inspection procedure are to be issued

9.4 In addition to the above general reporting requirements, all specified NDT methods will have particular requirements and details that shall be listed in the report. Refer to the applicable method standards for specific requirements.

9.5 The shipbuilder or manufacturer is to keep the inspection records for the appropriate period deemed by Classification Societies.

10. Unacceptable indications and repairs

All indications (discontinuities) exceeding the applicable acceptance criteria shall be classed as defects, and shall be eliminated and repaired as per applicable IACS requirements, including UR and Recommendations.

End of Document

W35 Requirements for NDT Service Suppliers

(June 2019)
(Rev.1
Oct 2023)

1. General

1.1 Scope

(i) Firms providing Non-Destructive Testing (NDT) and Advanced Non-Destructive Testing (ANDT[1]) Services on the new construction of ships and offshore structures subject to classification, need to fulfil the requirements set out in this UR. In this document, such firms will be referred to as the NDT Service Supplier.

Note 1 – for the remainder of this UR, wherever there is a reference to NDT, it also includes ANDT

(ii) This UR applies to:

- Independent NDT companies, and;
- Internal departments of fabricators, e.g., shipyards, hull block/section fabricators performing NDT

The NDT service specified in this UR covers the service application to the following hull structure and associated items at the fabrication stage during new construction:

- The welding of components that are integrated into the ship or offshore structure
- The fabrication of independent fuel or cargo tanks (including those intended for low flashpoint fuels, e.g. type A, B and C independent tanks as described in IMO IGC and IGF Codes).
- Items listed within the definition of hull structure, as defined in UR Z23 section 2.1
- Rudders of welded construction

(iii) NDT Service Suppliers in the context of this UR are not included as part of the scope of UR Z17.The Classification Society shall verify the NDT Service Supplier in order to determine compliance with the requirements of this UR. The method of verification is to be decided by each Classification Society.

Notes:

1. This UR is to be uniformly implemented by IACS Societies on or after 1 July 2020.
2. Rev.1 of this UR is to be uniformly implemented by IACS Societies on or after 1 January 2025.

W35 (cont)

1.2 Objective

The objective of this UR is to ensure that the NDT Service Supplier is using appropriate procedures, has qualified and certified personnel and has implemented written procedures for training, experience, education, examination, certification, performance, application, control, verification and reporting of NDT. In addition, the NDT Service Supplier shall furnish appropriate equipment and facilities commensurate with providing a professional NDT Service.

1.3 Terms and definitions

The following terms and definitions apply for this document.

NDT	Non-destructive testing-the development and application of technical methods to examine materials or components in ways that do not impair their future usefulness and Serviceability, in order to measure geometrical characteristics and to detect, locate, measure and evaluate flaws. NDT is also known as non-destructive examination (NDE), non-destructive inspection (NDI) and non-destructive evaluation (NDE). Comprising, but not limited to the following methods and techniques: MT, PT, RT, VT, UT, and ET
ANDT	The above definition of NDT applies, however ANDT includes advanced methods such as RT-D, PAUT, TOFD and AUT.
NDT Service Supplier	Independent NDT company or NDT department/section that forms a part of a company providing NDT Services on the new construction of ships and offshore structures, as applicable to the bodies performing NDT on the items as listed in paragraph 1.1 (ii) of this UR.
Society	The Classification Society
MT	Magnetic Particle Testing
PT	Penetrant Testing
RT	Radiographic Testing
RT-D	Digital Radiography (Several techniques within the method RT, e.g., Computed Radiography or Direct Radiography).
UT	Ultrasonic Testing
PAUT	Phased Array Ultrasonic Testing (Technique within the method UT).
TOFD	Time of Flight Diffraction (Technique within the method UT).
AUT	Automated Ultrasonic Testing. A technique by which an object is tested by ultrasound using probes operating under mechanical control and where ultrasonic data is collected automatically.
ET	Electromagnetic Testing (i.e. Eddy Current Testing and/or Alternating Current Field Measurements [ACFM])

W35 (cont)

VT	Visual Testing
Industrial sector	Section of industry or technology where specialised NDT practices are used, requiring specific product-related knowledge, skill, equipment and/or training.
Product sector	A category of component that may be defined by type of manufacturing, fabrication, and/or shape, which may have unique, and/or general manufacturing/fabrication defect characteristics. Product sector examples include (but not limited to): castings, wrought products (forgings), rolled products, extruded products, and welds. NDT personnel may hold certification in a method which is related to a product sector.

1.4 References

The following referenced documents are to be used for the application of this document as appropriate. For updated references, the latest edition of the referenced document (including any amendments) applies.

- ISO 9712: 2021; Non-destructive Testing-Qualification and certification of NDT personnel
- ISO/IEC 17020:2012; Conformity assessment - Requirements for the operation of various types of bodies performing inspection
- ISO/IEC 17024:2012; Conformity assessment - General requirements for bodies operating certification of persons
- ISO 9001:2015; Quality Management Systems-Requirements
- SNT-TC-1A: 2020; Personnel Qualification and Certification in Nondestructive Testing
- ANSI/ASNT CP-189:2020; ASNT Standard for Qualification and Certification of Nondestructive Testing Personnel

Other national adoptions of the standards listed above are accepted as compliant and hence are accepted for use together with this document.

2. Requirements for the NDT Service Supplier

The NDT Service Supplier shall document, as required in 2.2 to 2.9, that it has the competence and control needed to perform the specified NDT Services.

2.1 Requirements for document

The following documents shall be available for the Society upon request:

– an outline of NDT Service Supplier's organisation and management structure, including any subsidiaries

– information on the structure of the NDT Service Supplier's Quality Management System

W35 (cont)

- quality manual and documented procedures covering the requirements given in item 2.2
- for companies with in-house certification of personnel scheme; a written practice developed in accordance with a recognised standard or recommended practice (i.e., ASNT's SNT-TC-1A, 2020, ANSI/ASNT CP-189, 2020 or similar).
- operational work procedures for each NDT method including selection of the NDT technique.
- training- and follow-up programmes for NDT operators including practical training on various ship and offshore products
- written statement issued by the employer, based upon the scope of certification, authorising the operator to carry out specified tasks
- procedure for supervisor's authorisation of NDT operators
- experience of the NDT Service Supplier in the specific NDT Service area,
- for companies which obtain certification from an accredited certification body; a list of documented training and experience for NDT operators within the relevant NDT Service area, including qualifications and third party certification per ISO 9712:2021 based certification schemes.
- description of equipment(s) used for the NDT Services performed by the NDT Service Supplier
- a guide for NDT operators to use equipment mentioned above
- record formats for recording results of the NDT Services referred to in item 2.9
- information on other activities which may present a Conflict of interest, if applicable
- record of customer claims and corrective actions, where applicable
- any legal proceedings against the company in the past/currently in the courts of law, where applicable

2.2 Quality management system

The NDT Service Supplier shall have a documented quality management system, covering at least:

- work procedures for all tasks and operations, including the various NDT methods and NDT techniques for which the NDT Service Supplier is involved.
- preparation, issuance, maintenance and control of documents
- maintenance and calibration of the equipment
- training programs for the NDT operators and the supervisors

W35 (cont)

- maintenance of records for NDT operators' and the supervisors' training, qualification and certification
- certification of NDT operators including re-validation and recertification
- procedure for test of operators' visual acuity
- supervision and verification of operation to ensure compliance with the NDT procedures
- quality management of subsidiaries
- job preparation
- order reference system where each engagement is traceable to when, who and where the test was carried out.
- recording and reporting of information, including retention time of records
- code of conduct for the NDT Service Supplier's activities; especially the NDT activities
- periodic review of work process procedures
- corrective and preventive action
- feedback and continuous improvement
- internal audits
- the provision of accessibility to required codes, standards and procedures to assist NDT operators.

A documented quality system complying with the most current version of ISO/IEC 17020:2012 and including the above would be considered acceptable. The NDT Service Supplier should satisfy the requirements of Type A or Type B or Type C inspection body, as described in ISO/IEC 17020:2012. In all cases, production staff shall not be allowed to inspect their own work in the case of Type C inspection body.

2.3 Qualification and certification of NDT personnel

The NDT Service Supplier is responsible for the qualification and preferably 3rd party certification of its supervisors and operators to a recognised certification scheme based on ISO 9712: 2021.

Personnel qualification to an employer based qualification scheme as e.g. SNT-TC-1A, 2020 or ANSI/ASNT CP-189, 2020 may be accepted if the NDT Service Supplier's written practice is reviewed and found acceptable by the Society. The NDT Service Supplier's written practice shall as a minimum, except for the impartiality requirements of a certification body and/or authorised body, generally comply with the requirements of ISO 9712: 2021.

For NDT operators holding certificates issued via an employer based scheme, the employer's certification shall be deemed revoked when employment is terminated by either party.

W35 (cont)

The supervisors' and operators' certificates and competence shall comprise all industrial and product sectors and techniques being applied by the NDT Service Supplier.

Level 3 personnel shall be certified by one of the following means:

(i) obtain certification from an accredited certification body.

(ii) obtain certification from an employer based scheme via the examination method, as detailed in the written practice. It is not permissible to directly appoint a level 3 without examination if the intended certification route is from an employer based scheme.

2.4 Supervisor

The NDT Service Supplier shall have a supervisor or supervisors, responsible for the following:

a) validate NDT instructions and procedures established and reviewed by level 3 personnel;

b) review of NDT reporting;

c) supervise all tasks and NDT operations at all levels;

d) inspection of NDT equipment, tools and calibration;

e) re-evaluate the qualification of the operators annually on behalf of the NDT Service Supplier.

Normally, the NDT Service Supplier shall employ (on a full-time basis) a level 3 supervisor, certified to level 3 in the applicable method(s) as per the requirements of this UR.

It is recognised that an NDT Service Supplier may not directly employ a Level 3 in all the stated methods practiced. In such cases, it is permissible to employ an external Level 3 who is certified by an accredited certification body in those methods not held by the full-time Level 3(s) of the NDT Service Supplier.

Alternatively, and by agreement with the Society, the NDT Service Supplier may appoint an internal (full-time employed) supervisor of NDT activities, who does not hold level 3 certification. In this case, the supervisor shall be certified to a minimum of level 2.
For NDT Service Suppliers operating this alternative approach, the NDT Service Supplier shall comply with all other requirements of this UR and shall employ (either part time or on a contract basis) Level 3 NDT Services (to carry out functions such as procedure development, procedure approval, consultancy, review etc.) from outside the NDT Service Supplier organisation. The appointed external level 3 shall be certified by an accredited certification body in all the applicable methods appropriate to the scope of the NDT operations.

2.5 Operator

The operator carrying out the NDT and interpreting indications, shall as a minimum, be qualified and certified to Level 2 in the NDT method(s) concerned and as described in item 2.3.

However, operators only undertaking the gathering of data using any NDT method and not performing data interpretation or data analysis may be qualified and certified as appropriate, at level 1.

W35 (cont)

The operator shall have adequate knowledge of materials, weld, structures or components, NDT equipment and limitations that are sufficient to apply the relevant NDT method for each application appropriately.

2.6 Equipment

The NDT Service Supplier shall maintain records of the NDT equipment used and detail information related to maintenance, calibration and verification activities. If the NDT Service Supplier hires equipment, such equipment shall have updated calibration records, and the operators shall be familiar with the specific equipment type prior to using it. Under any circumstance, the NDT Service Supplier shall possess sufficient equipment to carry out the NDT Services being a part of the NDT scope required by the Society.

Where the equipment is of unique nature, the NDT operators shall be trained by competent personnel in the operation and use of the equipment before carrying out NDT using this equipment.

2.7 Work instructions and procedures

The NDT Service Supplier shall produce written procedures for the NDT being applied. These procedures are to be written, verified or approved by the NDT Service Supplier's Level 3 (either internal, or external, as described in section 2.4). Procedures shall define all relevant information relating to the inspection including defect evaluation against acceptance criteria in accordance with the Society Rules. All NDT procedures and instructions shall be properly documented in such a way that the performed testing can be easily retraced and/or repeated at a later stage. All NDT procedures are to be acceptable to the Society.

2.8 Sub-contractor

The NDT Service Supplier shall give information of agreements and arrangements if any part(s) of the NDT Services provided are subcontracted, included level 3 NDT Services (as described in section 2.4). The NDT Service Supplier, in the following-up of subcontracts shall give emphasis to the quality management system of the subcontractor.

Subcontractors shall meet the same requirements placed on NDT Service Suppliers for any NDT performed.

2.9 Reporting

All NDT shall be properly documented in such a way that the performed testing and examination can be easily retraced and/or repeated as a later stage. The reports shall identify the defects present in the tested area, and a conclusive statement as to whether the material, weld, component or structure satisfies the acceptance criteria or not.

The report shall include a reference to the applicable standard, NDT procedure and acceptance criteria applied in the applicable NDT method/technique. In general, the acceptance criteria shall comply with the Society Rules. Reports shall be signed by the personnel with the appropriate level of certification, and the appropriate signatory status as defined in the Quality Management System.

End of Document